SKETCH/AREA TABLE ADDENDUM

SUBJECT INFO

File No.: 104741 Parcel No.: 091W09AA07000
Property Address: 1715 WILMINGTON PL
City: STAYTON County: State: OR ZipCode: 97383
Owner:
Client: Client Address:
Appraiser Name: Inspection Date:

SKETCH

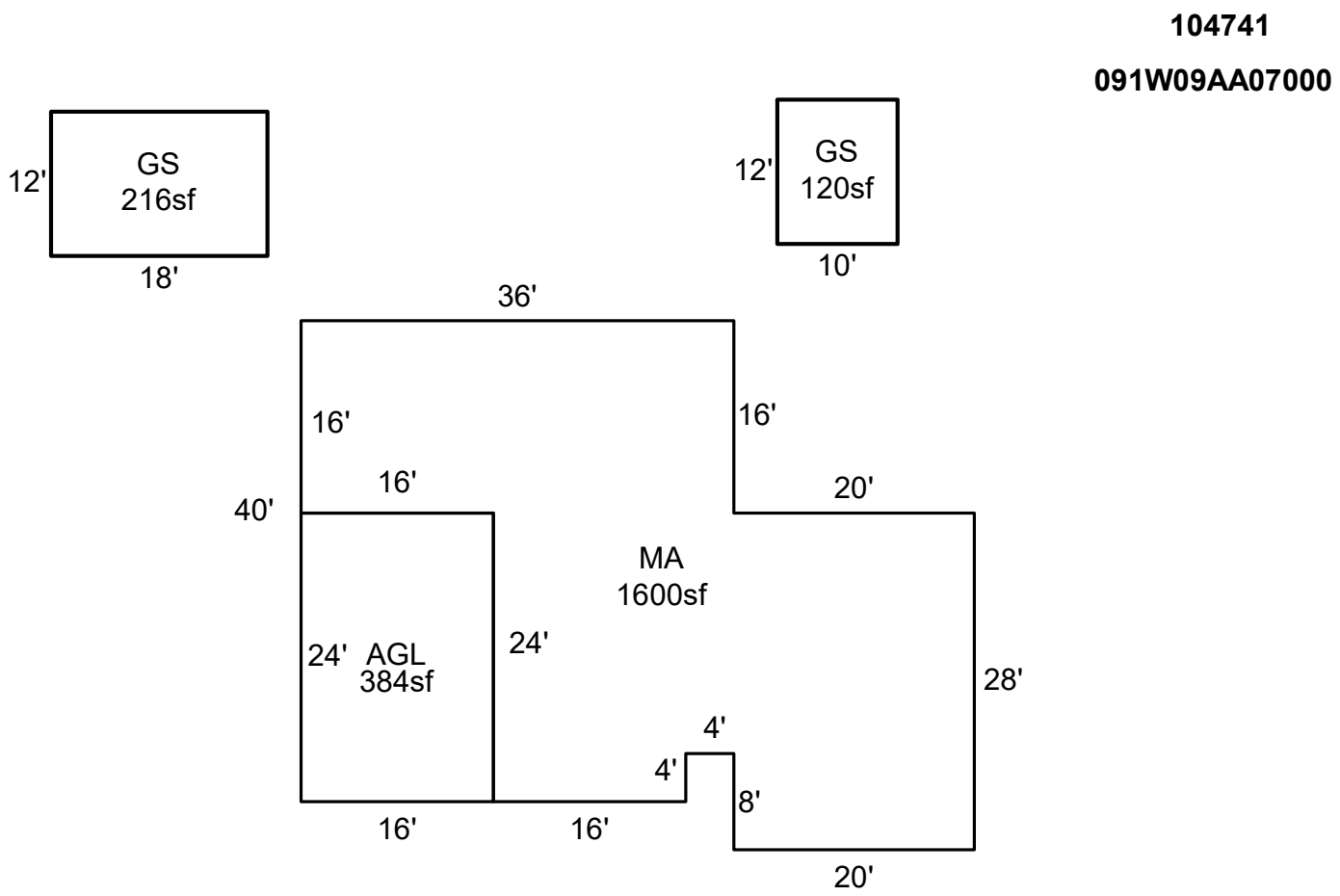

Sketch by ApexSketch

AREA CALCULATIONS SUMMARY

Code	Description	Factor	Net Size	Perimeter	Net Totals
GBA	GS	1.0	216.0	60.0	
	GS	1.0	120.0	44.0	336.0
GLA1	MA	1.0	1600.0	208.0	1600.0
GAR	AGL	1.0	384.0	80.0	384.0

Net LIVABLE	cnt	0	(rounded)	1,600
Net BUILDING	cnt	2	(rounded)	336

COMMENT TABLE 1

Drawn by Pat Long 08/05/2009
UPDATED BY LK 2.5.25

COMMENT TABLE 2

1.24.25 CYCLE TS

COMMENT TABLE 3

© iLOOKABOUT (US) Inc. dba Apex Software