Summary Lead Appr: ww 1.10.25 Clerk:_____ Lead Clerk:_____ Appr: JJS 2.12.25 Print Date: 9/24/2024

Acct ID: 512432 MTL: 043W13D000500 Date: 1/3/25 Appr: JJS Prop Class: 550 RMV Prop Class: 450 451

Situs: 0 RIVERSIDE DR NE SAINT PAUL OR 97137 20703 MaSaNh: 02 06 000 Unit: 65590 551 Year: 2024

Last Date Appraised: 03/27/2020 Appraiser: JORDAN SCHULTZ Retag: Y N Tag info: 2025 - NEW CONSTRUCTION (Residence)

Owner: CONNOR LT & CONNOR, SEAN R TRE & Roll Type: R

Cycle Tag Sales Verification Other:_____ Inspection level: 1 2 3 4 LCB TTO INSP AV: 300

RMV Land: 1610 RMV Imp: 0 RMV Total: 1610 MAV: 0 MSAV: 300 SAV: 671

Comment:

Notations New MA @ 48%, add OSDN

RP/MS	Code	Description
RP	ZONED	FARM EFU ZONED

OSDs OSD N SA OSDN Chris 2/12/25

No OSD data available. CREATE HOMESITE 25-26 - chramy to review land

Land ~~will need Homsite next year~~

Site: 1 Code Area: 45570 Size: 2.66 Acres Use Code: 005 Zone: REST SAV Use: 011 Exception: 0

Class: WST Value Source: WASTE RURAL Description: Rural WASTELAND RMV: 1610 Exception: Y N

Adjustment(s): WASTE view a Fire Patrol: Description:

Comments: Liability year - 1980 / 20-21: #35 C19 CYCLE WORK, NO CHG / 00-01; UPDATED MARKET VALUE, 4500160

Improvements - Residence / Manufactured Structures

No residence or manufactured structure improvement data available.

Improvements - Accessory Buildings

No improvement data available for all other stat class types.

1S2 MA S 3423 sF 2024 new @ 48%

ACCOUNT # _____ DATE: 1/3/25 RMV CLASS _____ PROP CLASS _____
MTL _____ APPR JJS TAG Y N _____
COMMENTS: _____

RESIDENCE / MANUFACTURED STRUCTURES

STAT 1S2 QLTY + - FLOOR 1st
AREA 3423 EFF AREA _____ BED 2
ROOF + HVAC +
BATH PKG: _____ BATH 2 BATH + 1 1/2 BTH
FIREPLACE: 1
KITCHEN - +
YR BLT 2024 EFF YR 2024 ECON _____
% COMP 48 % GOOD FUNC _____
EXCEPT Y N LUMP SUM: _____
MISC: _____
YI CLASS _____ F G A E
SKIRT + LIN FT _____
COMMENT: _____

STAT 1S2 QLTY + - FLOOR 2nd
AREA 785 EFF AREA _____ BED 1
ROOF + HVAC +
BATH PKG: _____ BATH 1 BATH + _____ 1/2 BTH
FIREPLACE: _____
KITCHEN - +
YR BLT 2024 EFF YR 2024 ECON _____
% COMP 48 % GOOD FUNC _____
EXCEPT Y N LUMP SUM: _____
MISC: _____
YI CLASS _____ F G A E
SKIRT + LIN FT _____
COMMENT: _____

STAT _____ QLTY + - FLOOR _____
AREA _____ EFF AREA _____ BED _____
ROOF + HVAC +
BATH PKG: _____ BATH _____ BATH + _____ 1/2 BTH
FIREPLACE: _____
KITCHEN - +
YR BLT _____ EFF YR _____ ECON _____
% COMP _____ % GOOD FUNC _____
EXCEPT Y N LUMP SUM: _____
MISC: _____
YI CLASS _____ F G A E
SKIRT + LIN FT _____
COMMENT: _____

ACCESSORY IMPROVEMENTS / OUTBUILDINGS

TYPE AGV
STAT / CLASS _____
SIZE 1678
FAIR
AVERAGE
GOOD
EXCELLENT
BATH _____
YR BLT 2024
EFF YR 2024
% COMP _____
EXCEPT Y N
MISC: _____
COMMENT: _____

TYPE _____
STAT / CLASS _____
SIZE _____
FAIR
AVERAGE
GOOD
EXCELLENT
BATH _____
YR BLT _____
EFF YR _____
% COMP _____
EXCEPT Y N
MISC: _____
COMMENT: _____

TYPE _____
STAT / CLASS _____
SIZE _____
FAIR
AVERAGE
GOOD
EXCELLENT
BATH _____
YR BLT _____
EFF YR _____
% COMP _____
EXCEPT Y N
MISC: _____
COMMENT: _____

TYPE _____
STAT / CLASS _____
SIZE _____
FAIR
AVERAGE
GOOD
EXCELLENT
BATH _____
YR BLT _____
EFF YR _____
% COMP _____
EXCEPT Y N
MISC: _____
COMMENT: _____

Percent Complete Form

Account # 512432

Additions % Item	Additions % Sum		New Homes No Basement % Item	New Homes No Basement % Sum	New Homes Basement % Item	New Homes Basement % Sum
3%	0%	Plans/Survey	3%	0%	3%	0%
2%		Excavation	2%		4%	
3%		Foundation	3%		10%	
35%	45%	Framing	14%	20%	16%	35%
8%	50%	Trusses	7%	30%	7%	40%
7%	60%	Roofing	7%	35%	7%	45%
7%	65%	Windows/Ext Doors	7%	45%	6%	55%
5%	70%	Siding	5%	50%	5%	60%
4%	75%	Plumbing Rough-In	4%		3%	
3%		Electrical Rough-In	3%	55%	2%	65%
2%	80%	Heating Rough-In	2%		1%	
		Heating Unit	1%	60%	1%	
3%		Insulation	3%		2%	
5%	85%	Drywall (Finished)	5%	65%	4%	70%
2%	90%	Paint Interior	2%	70%	2%	75%
2%		Paint Exterior	2%		2%	
		Cabinets	6%	75%	5%	80%
2%	95%	Electrical Fixtures	3%	80%	2%	
2%		Plumbing Fixtures	4%	85%	3%	85%
3%	100%	Floor Coverings & Countertops	7%	90%	6%	90%
2%		Interior Trim Carpentry	7%	95%	6%	95%
		Porch/Entry/Stoop	2%	100%	2%	100%
		Finish Grade	1%		1%	

APPR JSS	Date 11/3/23	YR For 25-26	% COMP 48%
APPR	Date	YR For	% COMP
APPR	Date	YR For	% COMP
APPR	Date	YR For	% COMP

SKETCH/AREA TABLE ADDENDUM

SUBJECT INFO

File No.: 512432 Parcel No.: 043W13D000500
Property Address: 20703 EAST RIVERSIDE DRIVE NE
City: ST PAUL County: Marion State: OR ZipCode: 97137
Owner:
Client: Client Address:
Appraiser Name: Inspection Date:

SKETCH

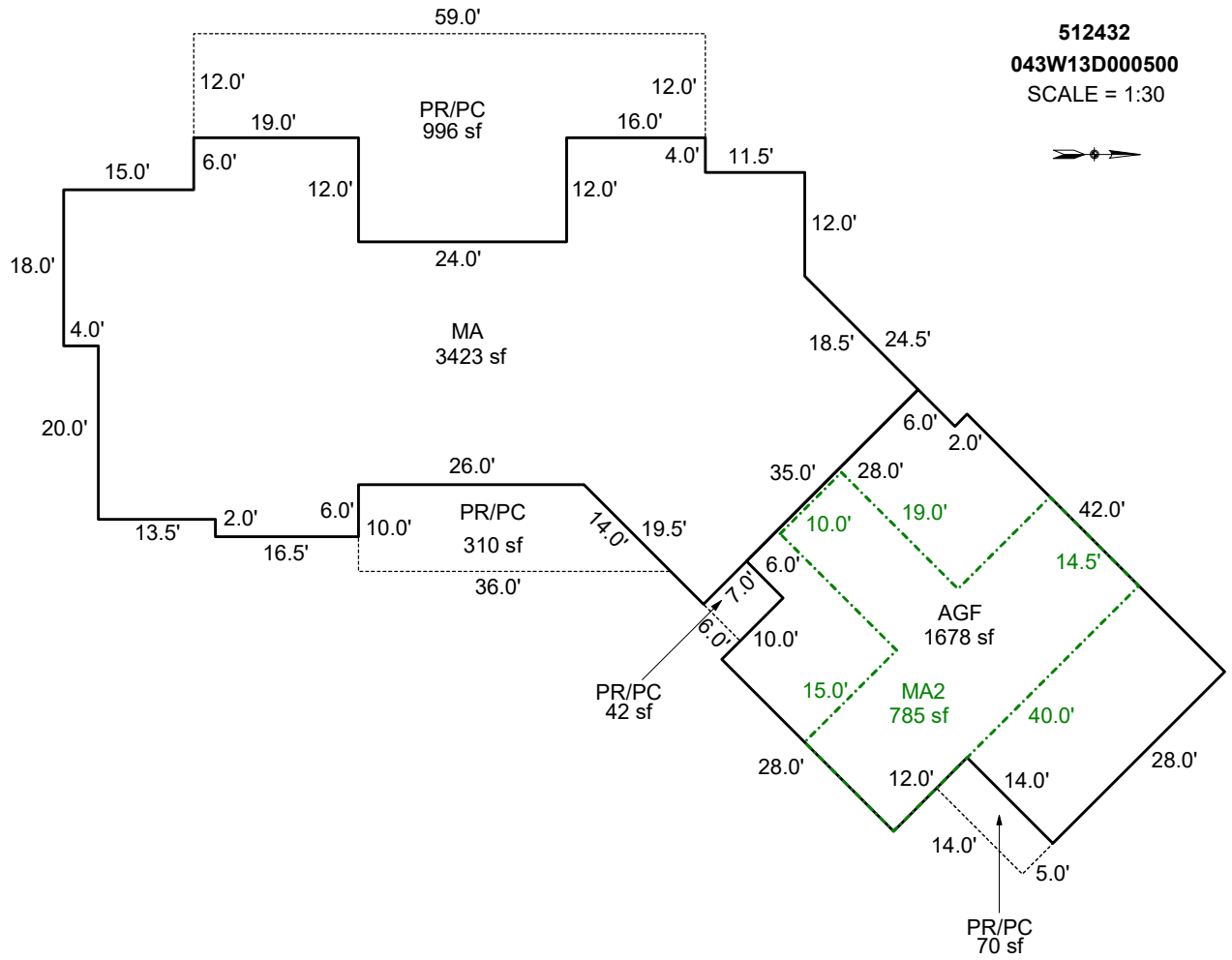

Sketch by ApexSketch

AREA CALCULATIONS SUMMARY

Code	Description	Factor	Net Size	Perimeter	Net Totals
GLA1	MA	1.0	3442.4	310.4	3442.4
MA2	MA2	1.0	770.0	147.0	770.0
GAR	AGF	1.0	1680.0	176.0	1680.0
P/P	PR/PC	1.0	996.0	166.0	
	PR/PC	1.0	42.0	26.0	
	PR/PC	1.0	70.0	38.0	
	PR/PC	1.0	310.0	86.1	1418.0
	Net LIVABLE	cnt	1	(rounded)	4,212

COMMENT TABLE 1

APEX BY CLOBERG 06/11/2024 24-002261 MA
UPDATED BY CLOBERG 01/08/25

COMMENT TABLE 2

JJS 01/03/25

COMMENT TABLE 3

TAGS L2

© iLOOKABOUT (US) Inc. dba Apex Software