Summary Lead Appr: WW 2.18.25 Clerk: _____ Lead Clerk: _____ Appr: MDL Inspd 2/18/25

Print Date: 9/24/2024

Acct ID: 609067 MTL: 092W18B000701 Date: 1/14/25 Appr: MDL Prop Class: ~~400~~ 401 RMV Prop Class: ~~400~~ 401

Situs: 11061 WINTER WAY SE TURNER OR 97392 MaSaNh: 07 06 002 Unit: 127823 Year: ~~2024~~ 2025

Last Date Appraised: Appraiser: MATT LORD Retag: (Y) N Tag info: 2025 - NEW CONSTRUCTION (Residence)

Owner: POPE, JONATHAN HOWARD Roll Type: R

Cycle (Tag) Sales Verification Other: _____ Inspection level: 1 (2) 3 4 LCB TTO INSP AV: 61400

RMV Land: 126280 RMV Imp: 0 RMV Total: 126280 MAV: 0 MSAV: 0 SAV: 0

Comment: 24-000618 NSFD

Notations 25-26: AGF @ 50% Complete/No Start on MAIN House Exception

ADD YI 2025-26

No notation data available.

OSDs

No OSD data available.

OSD N

Land NO UNIT NREST

Site: 0 Code Area: 05590 Size: 3.03 Acres Use Code: 004 Zone: NREST SAV Use: Exception: 61400

Class: WHD Value Source: Rural at MKT Description: RMV: 126280 Exception: Y N

Adjustment(s): Fire Patrol: Description:

Comments:

Improvements - Residence / Manufactured Structures

No residence or manufactured structure improvement data available.

Improvements - Accessory Buildings

No improvement data available for all other stat class types.

ACCOUNT # 609067 DATE: 11/14/24 RMV CLASS 401 PROP CLASS
MTL APPR MDL TAG Y N
COMMENTS:

RESIDENCE / MANUFACTURED STRUCTURES

STAT 5 QLTY + - FLOOR MA
AREA 2053 EFF AREA 2053 BED 1
ROOF + HVAC +
BATH PKG: 1.5 BATH BATH + 1/2 BTH
FIREPLACE: 1
KITCHEN - +
YR BLT 2024 EFF YR 2024 ECON
% COMP 0 % GOOD FUNC
EXCEPT Y N LUMP SUM:
MISC:
YI CLASS F G A E
SKIRT + LIN FT
COMMENT: PATIO / OUT DOOR FIREPLACE
25-26 Not started

STAT 5 QLTY + - FLOOR MA2
AREA 1038 EFF AREA 1038 BED 2
ROOF + HVAC +
BATH PKG: 1 BATH BATH + 1/2 BTH
FIREPLACE:
KITCHEN - +
YR BLT 2024 EFF YR 2024 ECON
% COMP 0 % GOOD FUNC
EXCEPT Y N LUMP SUM:
MISC:
YI CLASS F G A E
SKIRT + LIN FT
COMMENT:
2526 Not started

STAT QLTY + - FLOOR
AREA EFF AREA BED
ROOF + HVAC +
BATH PKG: BATH BATH + 1/2 BTH
FIREPLACE:
KITCHEN - +
YR BLT EFF YR ECON
% COMP % GOOD FUNC
EXCEPT Y N LUMP SUM:
MISC:
YI CLASS F G A E
SKIRT + LIN FT
COMMENT:

ACCESSORY IMPROVEMENTS / OUTBUILDINGS

TYPE ATTU
STAT / CLASS 5
SIZE 364
FAIR
AVERAGE
GOOD
EXCELLENT
BATH
YR BLT 2024
EFF YR 2024
% COMP 50
EXCEPT Y N
MISC:
COMMENT:

TYPE AGF
STAT / CLASS 5
SIZE 3120
FAIR
AVERAGE
GOOD
EXCELLENT
BATH
YR BLT 2024
EFF YR 2024
% COMP 50
EXCEPT Y N
MISC:
COMMENT:

TYPE ATTF
STAT / CLASS 5
SIZE 336
FAIR
AVERAGE
GOOD
EXCELLENT 1BED
BATH 1
YR BLT 2024
EFF YR 50
% COMP
EXCEPT Y N
MISC:
COMMENT:

TYPE
STAT / CLASS
SIZE
FAIR
AVERAGE
GOOD
EXCELLENT
BATH
YR BLT
EFF YR
% COMP
EXCEPT Y N
MISC:
COMMENT:

Percent Complete Form

Account # 609067

Additions

New Homes

AGF

% Item	% Sum		No Basement % Item	No Basement % Sum	Basement % Item	Basement % Sum
3%		Plans/Survey	3%		3%	
2%	0%	Excavation	2%	0%	4%	0%
3%		Foundation	3%		10%	
35%	45%	Framing	14%	20%	16%	35%
8%	50%	Trusses	7%	30%	7%	40%
7%	60%	Roofing	7%	35%	7%	45%
7%	65%	Windows/Ext Doors	7%	45%	6%	55%
5%	70%	Siding	5%	50%	5%	60%
4%	75%	Plumbing Rough-In	4%		3%	
3%		Electrical Rough-In	3%	55%	2%	
2%		Heating Rough-In	2%		1%	65%
	80%	Heating Unit	1%	60%	1%	
3%		Insulation	3%		2%	
5%	85%	Drywall (Finished)	5%	65%	4%	70%
2%	90%	Paint Interior	2%	70%	2%	75%
2%		Paint Exterior	2%		2%	
		Cabinets	6%	75%	5%	80%
2%		Electrical Fixtures	3%	80%	2%	
2%	95%	Plumbing Fixtures	4%	85%	3%	85%
3%		Floor Coverings & Countertops	7%	90%	6%	90%
2%	100%	Interior Trim Carpentry	7%	95%	6%	95%
		Porch/Entry/Stoop	2%	100%	2%	100%
		Finish Grade	1%		1%	

APPR	MDL	Date	11/14/24	YR For	25-26	% COMP	50
APPR		Date		YR For		% COMP	
APPR		Date		YR For		% COMP	
APPR		Date		YR For		% COMP	

Percent Complete Form

Account # _____

Gut & Remodels

Interior Trim Carpentry	7%	90%
Floor Coverings & Countertops	7%	85%
Plumbing Fixtures	4%	80%
Electrical Fixtures	3%	80%
Cabinets	6%	75%
Drywall (Finished)	5%	70%
Insulation	3%	65%

APPR		Date		YR For		% COMP	
APPR		Date		YR For		% COMP	
APPR		Date		YR For		% COMP	
APPR		Date		YR For		% COMP	

Outbuilding Type:_____

	% Item	% Sum
Excavation/Foundation	10%	40%
Floor - Concrete/Wood	30%	
Walls - Framing	10%	65%
Walls - Covering/Siding	15%	
Roof - Framing/Trusses	15%	
Roof - Sheathing	5%	95%
Roof - Cover	10%	
Doors & Windows	5%	100%

APPR		Date		YR For		% COMP	
APPR		Date		YR For		% COMP	
APPR		Date		YR For		% COMP	
APPR		Date		YR For		% COMP	

SKETCH/AREA TABLE ADDENDUM

SUBJECT INFO

File No.: 609067 Parcel No.: 092W18B000701
Property Address: 11061 WINTER WAY SE
City: TURNER County: MARION State: OR ZipCode: 97392
Owner:
Client: Client Address:
Appraiser Name: Inspection Date:

SKETCH

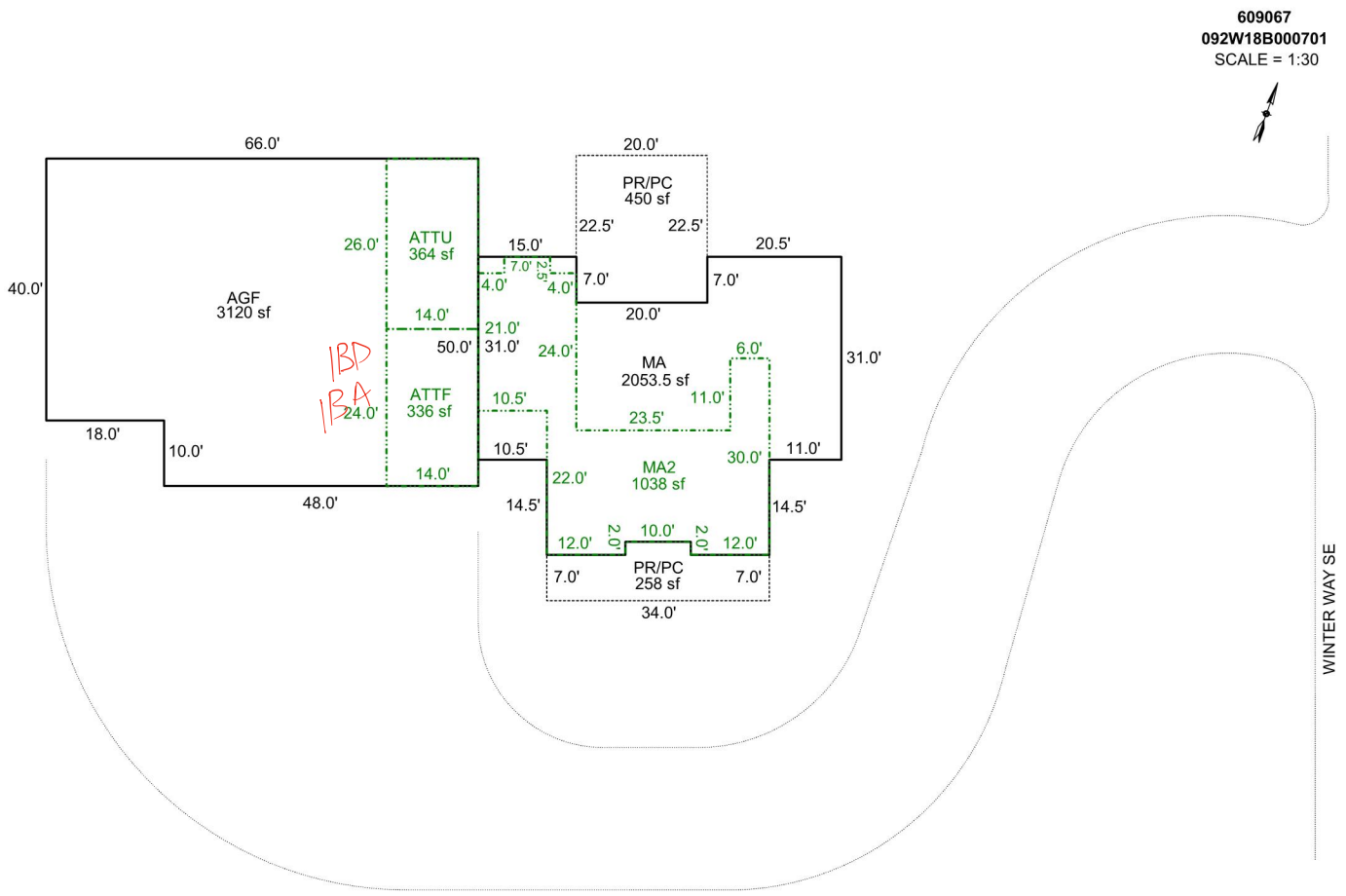

Sketch by Apex Sketch

AREA CALCULATIONS SUMMARY

Code	Description	Factor	Net Size	Perimeter	Net Totals
GLA1	MA	1.0	2053.5	220.0	2053.5
GLA2	MA2	1.0	1038.0	206.0	1038.0
GAR	AGF	1.0	3120.0	232.0	
	ATTF	1.0	336.0	76.0	
	ATTU	1.0	364.0	80.0	3820.0
P/P	PR/PC	1.0	258.0	86.0	
	PR/PC	1.0	450.0	85.0	708.0
	Net LIVABLE	cnt	2	(rounded)	3,092

COMMENT TABLE 1

APEX BY CJURAN 04/09/2024 24-000618 MA

COMMENT TABLE 2

COMMENT TABLE 3

© Starcap Marketing, LLC. dba Apex Software

1/14/25