Summary Lead Appr: WW 2.27.25 Clerk:_____ Lead Clerk:_____ Appr: MLH 2/27/25

Print Date: 9/24/2024

Acct ID: 330184 MTL: 072W29AA01304 Date: 10/10/24 1/17/25 Appr: MLH Prop Class: 401 RMV Prop Class: 401

Situs: 611 HAMPDEN LN NE SALEM OR 97317 MaSaNh: 03 06 000 Unit: 53411 Year: ~~2024~~ 2025

Last Date Appraised: 01/23/2024 Appraiser: MATTHEW HAMILTON Retag: Y N Tag info: 2025 - Tags/Permit (Completion)

Owner: BEKKEVOLD, KNUT Roll Type: R

Cycle Tag Sales Verification Other:_____ Inspection level: 1 2 3 4 LCB TTO INSP AV: 181930

RMV Land: 269650 RMV Imp: 104530 RMV Total: 374180 MAV: 0 MSAV: 0 SAV: 0

Comment: 24-25: L2 01.23.24 GRH

MA @ 65%. AGF not started
Retag for '26

Input MLH 2/26/25

Notations

No notation data available.

OSDs

Count	Code	Description	RMV	Code Area	Exception
1	MKTN	OSD - NO LANDSCAPE	30000	92410	14590

Land

Site: 1 Code Area: 92410 Size: 1.50 Acres Use Code: 004 Zone: NREST SAV Use: Exception: 116520

Class: 2BI Value Source: Rural at MKT Description: TWO BENCH IRR RMV: 239650 Exception: Y N

Adjustment(s): GSOIL, IRR Fire Patrol: Description:

Comments: 24-25: Disqual farm use
Liability year - 1975 / 16-17: CYCLE WORK PER #90 CHG SOIL CLASS & LAND SCH// 2400210//00-01; LAND REAPPRAISAL; per gi questionaire, all of this property is dry / 02-03: F02-31 SEPE FROM R76028 TO R330072 AND R33007//05-06: RECALC SETUP;#10 6/10/04.

Improvements - Residence / Manufactured Structures

Bldg: 1 Code Area: 92410 Stat Class: 132 + Year Blt: 2023 Eff Year Blt: 2023 Sq.Ft: 1605 % Complete: 35

Desc: Multi Story above grade Dimensions: RMV: 104530

Func Obsc: 100 Econ %: 100 Other %: 100 Exception: 50820 Adjust: Adjust RMV: 0

65% M/M

Floors

Type	Class	Display Group	Floor Size	Beds	Baths	Yr Blt	Eff Yr Blt	Inventory	
First Floor	3 +	Finished	1605	1	FB-1	2023	2023	ROOF, HVAC, BATH - 1, KIT-	Exception: Y N
Second Floor	3 +	Unfinished	1605	0	0	2023	2023		Exception: Y N

Accessories

Description	Class	Size SqFt	Eff Yr Blt	RMV	Quantity
No accessory data available					

YI 3A

M/M

Improvements - Accessory Buildings

No improvement data available for all other stat class types.

Percent Complete Form

Account # _____

Additions % Item	Additions % Sum		New Homes No Basement % Item	New Homes No Basement % Sum	New Homes Basement % Item	New Homes Basement % Sum
3%		Plans/Survey	3%		3%	
2%	0%	Excavation	2%	0%	4%	0%
3%		Foundation	3%		10%	
35%	45%	Framing	14%	20%	16%	35%
8%	50%	Trusses	7%	30%	7%	40%
7%	60%	Roofing	7%	35%	7%	45%
7%	65%	Windows/Ext Doors	7%	45%	6%	55%
5%	70%	Siding	5%	50%	5%	60%
4%	75%	Plumbing Rough-In	4%		3%	
3%		Electrical Rough-In	3%	55%	2%	65%
2%	80%	Heating Rough-In	2%		1%	
		Heating Unit	1%	60%	1%	
3%		Insulation 9/26 Accela	3%		2%	
5%	85%	Drywall (Finished)	5%	65%	4%	70%
2%	90%	Paint Interior	2%	70%	2%	75%
2%		Paint Exterior	2%		2%	
		Cabinets	6%	75%	5%	80%
2%		Electrical Fixtures	3%	80%	2%	
2%	95%	Plumbing Fixtures	4%	85%	3%	85%
3%		Floor Coverings & Countertops	7%	90%	6%	90%
2%	100%	Interior Trim Carpentry	7%	95%	6%	95%
		Porch/Entry/Stoop	2%	100%	2%	100%
		Finish Grade	1%		1%	

last updated

APPR	MLH	Date 1/17/25	YR For 25-26	% COMP	65
APPR		Date	YR For	% COMP	
APPR		Date	YR For	% COMP	
APPR		Date	YR For	% COMP	

Percent Complete Form

Account # _____

Gut & Remodels

Interior Trim Carpentry	7%	90%
Floor Coverings & Countertops	7%	85%
Plumbing Fixtures	4%	80%
Electrical Fixtures	3%	80%
Cabinets	6%	75%
Drywall (Finished)	5%	70%
Insulation	3%	65%

APPR		Date	YR For	% COMP	
APPR		Date	YR For	% COMP	
APPR		Date	YR For	% COMP	
APPR		Date	YR For	% COMP	

Outbuilding Type:_____

	% Item	% Sum
Excavation/Foundation	10%	40%
Floor - Concrete/Wood	30%	
Walls - Framing	10%	65%
Walls - Covering/Siding	15%	
Roof - Framing/Trusses	15%	
Roof - Sheathing	5%	95%
Roof - Cover	10%	
Doors & Windows	5%	100%

APPR		Date	YR For	% COMP	
APPR		Date	YR For	% COMP	
APPR		Date	YR For	% COMP	
APPR		Date	YR For	% COMP	

SKETCH/AREA TABLE ADDENDUM

SUBJECT INFO

File No.: 330184 Parcel No.: 072W29AA01304
Property Address: 611 HAMPDEN LANE NE
City: SALEM County: MARION State: OR ZipCode: 97317
Owner:
Client: Client Address:
Appraiser Name: Inspection Date:

SKETCH

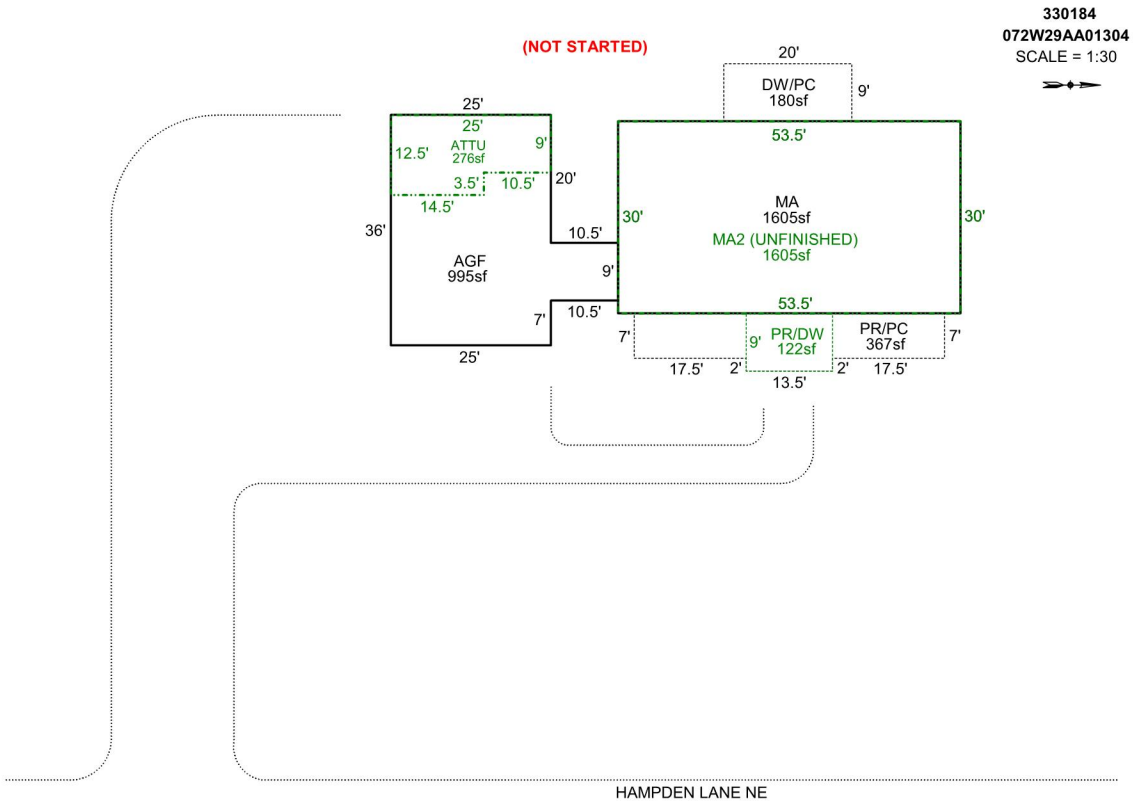

Sketch by Apex Sketch

AREA CALCULATIONS SUMMARY

Code	Description	Factor	Net Size	Perimeter	Net Totals
GLA1	MA	1.0	1605.0	167.0	1605.0
GLA2	ATTU	1.0	275.8	75.0	
	MA2 (UNFINISHE	1.0	1605.0	167.0	1880.8
GAR	AGF	1.0	994.5	143.0	994.5
P/P	PR/PC	1.0	366.5	115.0	
	PR/DW	1.0	121.5	45.0	
	DW/PC	1.0	180.0	58.0	668.0
	Net LIVABLE	cnt	3	(rounded)	3,486

COMMENT TABLE 1

APEX BY CJURAN 08/14/2023 555-23-004273
UPDATED BY CJURAN 02/08/2024

COMMENT TABLE 2

GRH 01/23/2024

1/17/25 MLH

COMMENT TABLE 3

TAGS L2

TAGS L3

© Starcap Marketing, LLC. dba Apex Software