Summary Lead Appr: WW 2.24.25 Clerk: _____ Lead Clerk: _____ Appr: MLH 2/28/25 | Print Date: 9/24/2024

Acct ID: 523783 MTL: 072W28A002000 Date: 1/17/25 Appr: MLH Prop Class: 401 RMV Prop Class: 401

Situs: 402 63RD AVE NE SALEM OR 97317 MaSaNh: 03 06 000 Unit: 70509 Year: ~~2024~~ 2025

Last Date Appraised: 02/02/2024 Appraiser: MATTHEW HAMILTON Retag: (Y) N Tag info: 2025 - Tags/Permit (MS-MOVING OFF)

Owner: YANEZ, OLIVERIO CUELLO Roll Type: R

Cycle Tag Sales Verification Other: _____ Inspection level: 1 2 3 4 LCB (TTO) INSP AV: 559870

RMV Land: 281130 RMV Imp: 775210 RMV Total: 1056340 MAV: 561860 MSAV: 0 SAV: 0

Comment: 24-25: L3 02.02.24 GRH
23-24: L3 11.08.22 MLH//1/4/2022 L3 MHamilton
LEVEL 4 C19 6-1-20 06WV

Manuf still there update inventory ~~close Tag~~ Input MLH 2/20/25

Notations

No notation data available.

UPDATE- OWNER CALLED 2/7/25 and said Manuf was just demo'd
Retag

OSDs

Count	Code	Description	RMV	Code Area	Exception
1	MKTA	OSD - AVERAGE	40000	92410	0

Land

Site: 1 Code Area: 92410 Size: 1.17 Acres Use Code: 004 Zone: NREST SAV Use: Exception: 0
Class: 2BD Value Source: Rural at MKT Description: TWO BENCH DRY RMV: 150140 Exception: Y N
Adjustment(s): GSOIL Fire Patrol: Description:
Comments: 00-01: f00-373 lladj between r23783 and r23782 //05-06: RECALC SETUP; APPR 31, 06/18/04.

Site: 2 Code Area: 92410 Size: 0.78 Acres Use Code: 004 Zone: NREST SAV Use: Exception: 0
Class: 4BD Value Source: Rural at MKT Description: FOUR BENCH DRY RMV: 90990 Exception: Y N
Adjustment(s): GSOIL Fire Patrol: Description:
Comments:

Improvements - Residence / Manufactured Structures

Bldg: 1 Code Area: 92410 Stat Class: 446 Year Blt: 1985 Eff Year Blt: 1985 Sq.Ft: 1248 % Complete: 100
Desc: MANUF STRUCT, CLASS 4 24' WIDE DOUBLE Dimensions: 52x24 RMV: 26970
Func Obsc: 100 Econ %: 100 Other %: 100 Exception: 0 Adjust: Adjust RMV: 0 N/C

Floors

Type	Class	Display Group	Floor Size	Beds	Baths	Yr Blt	Eff Yr Blt	Inventory	
First Floor	4	Finished	1248	0	FB-2	1985	1985	BATH - 2, KIT-, HVAC+, ROOF, SKIRT	Exception: Y N

Accessories

Description	Class	Size SqFt	Eff Yr Blt	RMV	Quantity
No accessory data available					

Bldg: 1 Code Area: 92410 Stat Class: 108 ~~7~~ Year Blt: 1977 Eff Year Blt: ~~1977~~ 1985 Sq.Ft: 0 % Complete: 100
Desc: Residential Other Improvements Dimensions: RMV: 1490
Func Obsc: 100 Econ %: 100 Other %: 100 Exception: 0 Adjust: Adjust RMV: 0 I/O

Floors

Type	Class	Display Group	Floor Size	Beds	Baths	Yr Blt	Eff Yr Blt	Inventory
No floor data available								

Accessories

Description	Class	Size SqFt	Eff Yr Blt	RMV	Quantity	
~~DECK~~ YE2A	3	72	1977	1220	1	Exception: Y N

Bldg: 2 Code Area: 92410 Stat Class: 138 Year Blt: 1985 Eff Year Blt: ~~1976~~ 1985 Sq.Ft: 0 % Complete: 100
Desc: Res other improvements Dimensions: RMV: 16220
Func Obsc: 100 Econ %: 100 Other %: 100 Exception: 0 Adjust: Adjust RMV: 0 I/O

Floors

Type	Class	Display Group	Floor Size	Beds	Baths	Yr Blt	Eff Yr Blt	Inventory	
Carport Attached	3	Unfinished	440	0	0	1985	1976	ROOF	Exception: Y N

Accessories

Description	Class	Size SqFt	Eff Yr Blt	RMV	Quantity
No accessory data available					

Bldg: 4 Code Area: 92410 Stat Class: 152 - Year Blt: 2021 Eff Year Blt: 2021 Sq.Ft: 3566 % Complete: 100
Desc: Multi Story above grade Dimensions: RMV: 723850
Func Obsc: 100 Econ %: 100 Other %: 100 Exception: 0 Adjust: Adjust RMV: 0

N/L

Floors

Type	Class	Display Group	Floor Size	Beds	Baths	Yr Blt	Eff Yr Blt	Inventory	
First Floor	5 -	Finished	1844	1	FB-1	2021	2021	BATH - 1, KIT, ROOF, HVAC+, FP - 1	Exception: Y N
Second Floor	5 -	Finished	1722	3	FB-2	2021	2021	BATH - 2, BATH+, HVAC+	Exception: Y N
Garage Attached	5	Finished	624	0	0	2021	2021	ROOF	Exception: Y N

Accessories

Description	Class	Size SqFt	Eff Yr Blt	RMV	Quantity	
YARD IMPROVEMENTS FAIR	5	0	2021	28067	1	Exception: Y N

Improvements - Accessory Buildings

Bldg: 5 Code Area: 92410 Stat Class: 341 Year Blt: 2022 Eff Year Blt: 2022 Sq.Ft: 100 % Complete: 100

Desc: Multi Purpose Shed (MP) Dimensions: 10x10 RMV: 790

Func Obsc: 100 Econ %: 100 Other %: 100 Exception: 0 Adjust: Adjust RMV: 0

N/L

Floors

Type	Class	Display Group	Floor Size	Beds	Baths	Yr Blt	Eff Yr Blt	Inventory	
Multi-Purpose Bldg	5	Finished	100	0	0	2022	2022	AVG	Exception: Y N

Accessories

Description	Class	Size SqFt	Eff Yr Blt	RMV	Quantity
No accessory data available					

Bldg: 6 Code Area: 92410 Stat Class: 341 Year Blt: 2022 Eff Year Blt: 2022 Sq.Ft: 192 % Complete: 100

Desc: Multi Purpose Shed (MP) Dimensions: 16x12 RMV: 5890

Func Obsc: 100 Econ %: 100 Other %: 100 Exception: 0 Adjust: Adjust RMV: 0

N/L

Floors

Type	Class	Display Group	Floor Size	Beds	Baths	Yr Blt	Eff Yr Blt	Inventory	
Multi-Purpose Bldg	5	Finished	192	0	0	2022	2022	AVG	Exception: Y N

Accessories

Description	Class	Size SqFt	Eff Yr Blt	RMV	Quantity
No accessory data available					

SKETCH/AREA TABLE ADDENDUM

SUBJECT INFO

File No.: 523783 Parcel No.: 072W28A 02000
Property Address: 402 63RD AV NE
City: SALEM County: MARION State: OR ZipCode: 97317
Owner:
Client: Client Address:
Appraiser Name: Inspection Date:

SKETCH

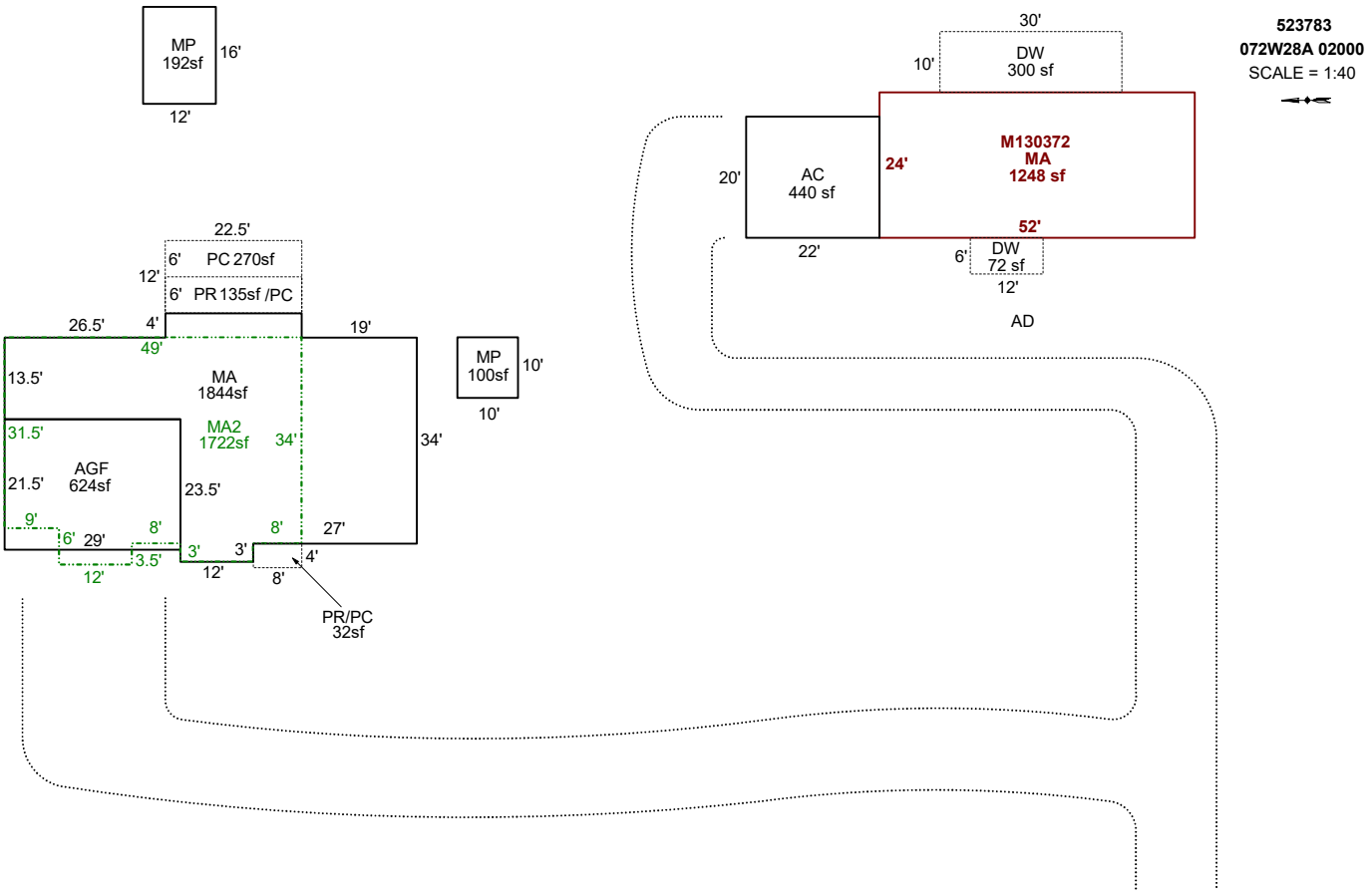

Sketch by ApexSketch

AREA CALCULATIONS SUMMARY

Code	Description	Factor	Net Size	Perimeter	Net Totals
GLA1	MA	1.0	1248.0	152.0	
	MA	1.0	1843.5	218.0	3091.5
GLA2	MA2	1.0	1721.5	179.0	1721.5
GAR	AC	1.0	440.0	84.0	
	AGF	1.0	623.5	101.0	
	MP	1.0	192.0	56.0	
	MP	1.0	100.0	40.0	1355.5
P/P	DW	1.0	300.0	80.0	
	DW	1.0	72.0	36.0	
	PC	1.0	270.0	69.0	
	PR/PC	1.0	32.0	24.0	
	PR	1.0	135.0	57.0	809.0
	Net LIVABLE	cnt	0	(rounded)	4,813

COMMENT TABLE 1

DRAWN BY JRONDEMA 12/15/17
UPDATED BY CJURAN 07/13/2021 555-21-003918
UPDATED BY CJURAN 03/13/2023
UPDATED BY CJURAN 02/08/2024
UPDATED BY CLOBERG 02/10/25

COMMENT TABLE 2

MLH 11/08/2022
GRH 11/07/2023
MLH 01/17/25

COMMENT TABLE 3

TAGS L3
TAGS L3
TAGS L3

© iLOOKABOUT (US) Inc. dba Apex Software

SKETCH/AREA TABLE ADDENDUM

SUBJECT INFO

File No.: 523783 Parcel No.: 072W28A 02000
Property Address: 402 63RD AV NE
City: SALEM County: MARION State: OR ZipCode: 97317
Owner:
Client: Client Address:
Appraiser Name: Inspection Date:

SKETCH

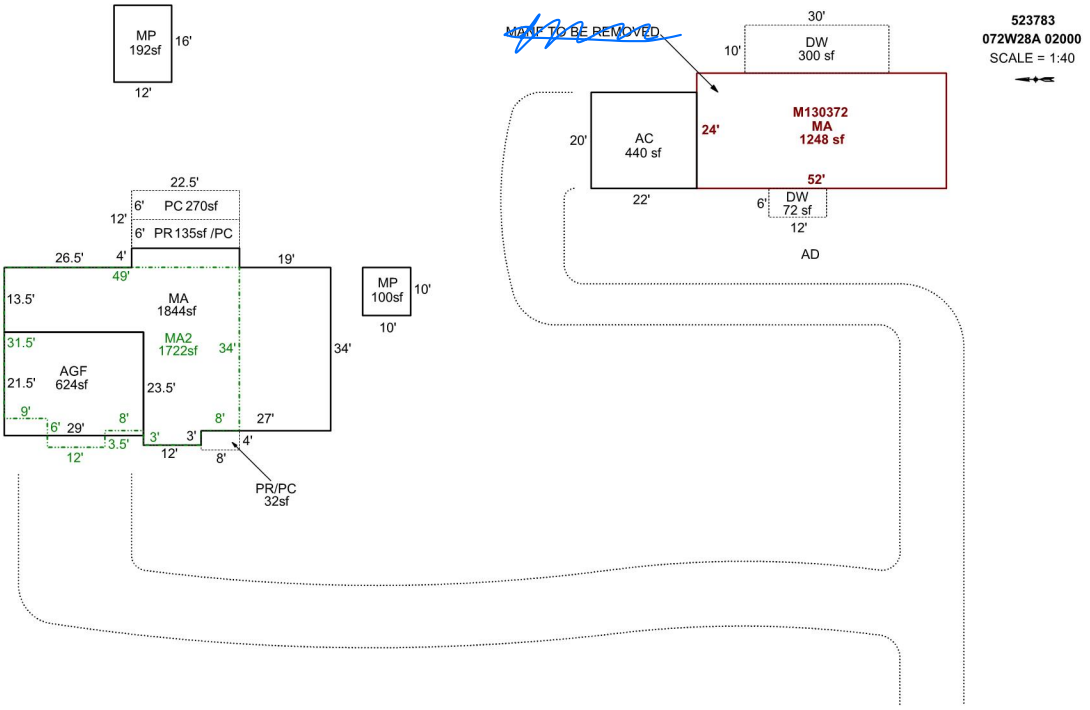

Sketch by Apex Sketch

AREA CALCULATIONS SUMMARY

Code	Description	Factor	Net Size	Perimeter	Net Totals
GLA1	MA	1.0	1248.0	152.0	
	MA	1.0	1843.5	218.0	3091.5
GLA2	MA2	1.0	1721.5	179.0	1721.5
GAR	AC	1.0	440.0	84.0	
	AGF	1.0	623.5	101.0	
	MP	1.0	192.0	56.0	
	MP	1.0	100.0	40.0	1355.5
P/P	DW	1.0	300.0	80.0	
	DW	1.0	72.0	36.0	
	PC	1.0	270.0	69.0	
	PR/PC	1.0	32.0	24.0	
	PR	1.0	135.0	57.0	809.0
	Net LIVABLE	cnt	3	(rounded)	4,813

COMMENT TABLE 1

DRAWN BY JRONDEMA 12/15/17
UPDATED BY CJURAN 07/13/2021 555-21-003918
UPDATED BY CJURAN 03/13/2023
UPDATED BY CJURAN 02/08/2024

COMMENT TABLE 2

MLH 11/08/2022
GRH 11/07/2023
1/17/25 MLH

COMMENT TABLE 3

TAGS L3
TAGS L3
TAGS L3

© Starcap Marketing, LLC. dba Apex Software

523783 GATE
2022-01-04 L2

523783 130372 MA W SID
2022-01-04 L2

523783 MA SW SIDE
2022-01-04 L2

523783 MP 8X10
2022-01-04 L2

523783 MA SW SIDE %
2022-01-04 L2

Summary Lead Appr: WW Clerk: Chris 2/27/24 Lead Clerk: Appr: GRH

Print Date: 7/31/2023

Acct ID: 523783 MTL: 072W28A002000 Date: ~~11/7/23~~ 2/2/24 Appr: GRH Prop Class: 401 RMV Prop Class: 401

Situs: 402 63RD AVE NE SALEM OR 97317 MaSaNh: 04 06 000 Unit: 70509 Year: 2023 / 2024

Last Date Appraised: 11/08/2022 Appraiser: GERARDO RAMIREZ HERNANDEZ Retag: Y N ~~Tag info: 2024 - Tags/Permit (MS-MOVING OFF)~~

Recheck for completion.

Owner: YANEZ, OLIVERIO CUELLO Roll Type: R

Cycle Tag Sales Verification Other: Inspection level: 1 2 3 4 LCB TTO INSP AV: 717360

RMV Land: 204570 RMV Imp: 768960 RMV Total: 973530 MAV: 374990 MSAV: 0 SAV: 0

Comment: 23-24: L3 11.08.22 MLH//1/4/2022 L3 MHamilton LEVEL 4 C19 6-1-20 06WV

L3 2/2/24

Notations

MH Still on site

INPUT GRH

No notation data available.

OSDs

Count	Code	Description	RMV	Code Area	Exception
1	MKTA	OSD - AVERAGE	40000	92410	0

Land

Site: 1 Code Area: 92410 Size: 1.17 Acres Use Code: 004 Zone: NREST SAV Use: Exception: 0

Class: 2BD Value Source: Rural at MKT Description: TWO BENCH DRY RMV: 102470 Exception: Y N

Adjustment(s): GSOIL Fire Patrol: Description:

Comments: 00-01: f00-373 lladj between r23783 and r23782 //05-06: RECALC SETUP; APPR 31, 06/18/04.

Site: 2 Code Area: 92410 Size: 0.78 Acres Use Code: 004 Zone: NREST SAV Use: Exception: 0

Class: 4BD Value Source: Rural at MKT Description: FOUR BENCH DRY RMV: 62100 Exception: Y N

Adjustment(s): GSOIL Fire Patrol: Description:

Comments:

Improvements - Residence / Manufactured Structures

Bldg: 1 Code Area: 92410 Stat Class: 446 Year Blt: 1985 Eff Year Blt: 1985 Sq.Ft: 1248 % Complete: 100

Desc: MANUF STRUCT, CLASS 4 24' WIDE DOUBLE Dimensions: 52x24 RMV: 29070

Func Obsc: 100 Econ %: 100 Other %: 100 Exception: 0 Adjust: Adjust RMV: 0

N/C

Floors

Real MH 130372

Type	Class	Display Group	Floor Size	Beds	Baths	Yr Blt	Eff Yr Blt	Inventory	
First Floor	4	Finished	1248	0	FB-2	1985	1985	ROOF, SKIRT, HVAC+, KIT-, BATH - 2	Exception: Y N

Accessories

Description	Class	Size SqFt	Eff Yr Blt	RMV	Quantity
No accessory data available					

Bldg: 1 Code Area: 92410 Stat Class: 108 Year Blt: 1977 Eff Year Blt: 1977 Sq.Ft: 0 % Complete: 100

Desc: Residential Other Improvements Dimensions: RMV: 1550

Func Obsc: 100 Econ %: 100 Other %: 100 Exception: 0 Adjust: Adjust RMV: 0

N/C

Floors

Type	Class	Display Group	Floor Size	Beds	Baths	Yr Blt	Eff Yr Blt	Inventory
No floor data available								

Accessories

Description	Class	Size SqFt	Eff Yr Blt	RMV	Quantity	
DECK	3	72	1977	1236	1	Exception: Y N

Bldg: 2 Code Area: 92410 Stat Class: 138 Year Blt: 1985 Eff Year Blt: 1976 Sq.Ft: 0 % Complete: 100

Desc: Res other improvements Dimensions: RMV: 16880

Func Obsc: 100 Econ %: 100 Other %: 100 Exception: 0 Adjust: Adjust RMV: 0

N/C

Floors

Type	Class	Display Group	Floor Size	Beds	Baths	Yr Blt	Eff Yr Blt	Inventory	
Carport Attached	3	Unfinished	440	0	0	1985	1976	ROOF	Exception: Y N

Accessories

Description	Class	Size SqFt	Eff Yr Blt	RMV	Quantity
No accessory data available					

Bldg: 4 Code Area: 92410 Stat Class: 152 - Year Blt: 2021 Eff Year Blt: 2021 Sq.Ft: 3566 % Complete: 100

Desc: Multi Story above grade Dimensions: RMV: 721460

Func Obsc: 100 Econ %: 100 Other %: 100 Exception: 342370 Adjust: Adjust RMV: 0

N/C

Floors

Type	Class	Display Group	Floor Size	Beds	Baths	Yr Blt	Eff Yr Blt	Inventory	
First Floor	5 -	Finished	1844	1	FB-1	2021	2021	KIT, ROOF, HVAC+, FP, BATH - 1	Exception: Y N
Second Floor	5 -	Finished	1722	3	FB-2	2021	2021	BATH - 2, BATH+, HVAC+	Exception: Y N
Garage Attached	5	Finished	624	0	0	2021	2021	ROOF	Exception: Y N

Accessories

Description	Class	Size SqFt	Eff Yr Blt	RMV	Quantity	
YARD IMPROVEMENTS FAIR	5	0	2021	26100	1	Exception: Y N

Improvements - Accessory Buildings

No improvement data available for all other stat class types.

MA AGF MH AC 11.07.24

ACCOUNT # 523783 DATE: 11/7/23 RMV CLASS 401 PROP CLASS 401
MTL 072W28A002000 APPR GRH TAG Y N
COMMENTS:

RESIDENCE / MANUFACTURED STRUCTURES

STAT QLTY + - FLOOR
AREA EFF AREA BED
ROOF + HVAC +
BATH PKG: BATH BATH + 1/2 BTH
FIREPLACE:
KITCHEN - +
YR BLT EFF YR ECON
% COMP % GOOD FUNC
EXCEPT Y N LUMP SUM:
MISC:
YI CLASS F G A E
SKIRT + LIN FT
COMMENT:

STAT QLTY + - FLOOR
AREA EFF AREA BED
ROOF + HVAC +
BATH PKG: BATH BATH + 1/2 BTH
FIREPLACE:
KITCHEN - +
YR BLT EFF YR ECON
% COMP % GOOD FUNC
EXCEPT Y N LUMP SUM:
MISC:
YI CLASS F G A E
SKIRT + LIN FT
COMMENT:

STAT QLTY + - FLOOR
AREA EFF AREA BED
ROOF + HVAC +
BATH PKG: BATH BATH + 1/2 BTH
FIREPLACE:
KITCHEN - +
YR BLT EFF YR ECON
% COMP % GOOD FUNC
EXCEPT Y N LUMP SUM:
MISC:
YI CLASS F G A E
SKIRT + LIN FT
COMMENT:

ACCESSORY IMPROVEMENTS / OUTBUILDINGS

TYPE MP
STAT / CLASS 341/5
SIZE 10X10
FAIR
AVERAGE
GOOD
EXCELLENT
BATH
YR BLT 2022
EFF YR 2022
% COMP 100
EXCEPT Y N
MISC: I/U
COMMENT: Was there since last appraised

TYPE MP
STAT / CLASS 341/5
SIZE 12X
FAIR
AVERAGE
GOOD
EXCELLENT
BATH
YR BLT 2022
EFF YR 2022
% COMP 100
EXCEPT Y N
MISC:
COMMENT:

TYPE
STAT / CLASS
SIZE
FAIR
AVERAGE
GOOD
EXCELLENT
BATH
YR BLT
EFF YR
% COMP
EXCEPT Y N
MISC:
COMMENT:

TYPE
STAT / CLASS
SIZE
FAIR
AVERAGE
GOOD
EXCELLENT
BATH
YR BLT
EFF YR
% COMP
EXCEPT Y N
MISC:
COMMENT:

SKETCH/AREA TABLE ADDENDUM

SUBJECT INFO

File No.: 523783 Parcel No.: 072W28A 02000
Property Address: 402 63RD AV NE
City: SALEM County: MARION State: OR ZipCode: 97317
Owner:
Client: Client Address:
Appraiser Name: Inspection Date:

SKETCH

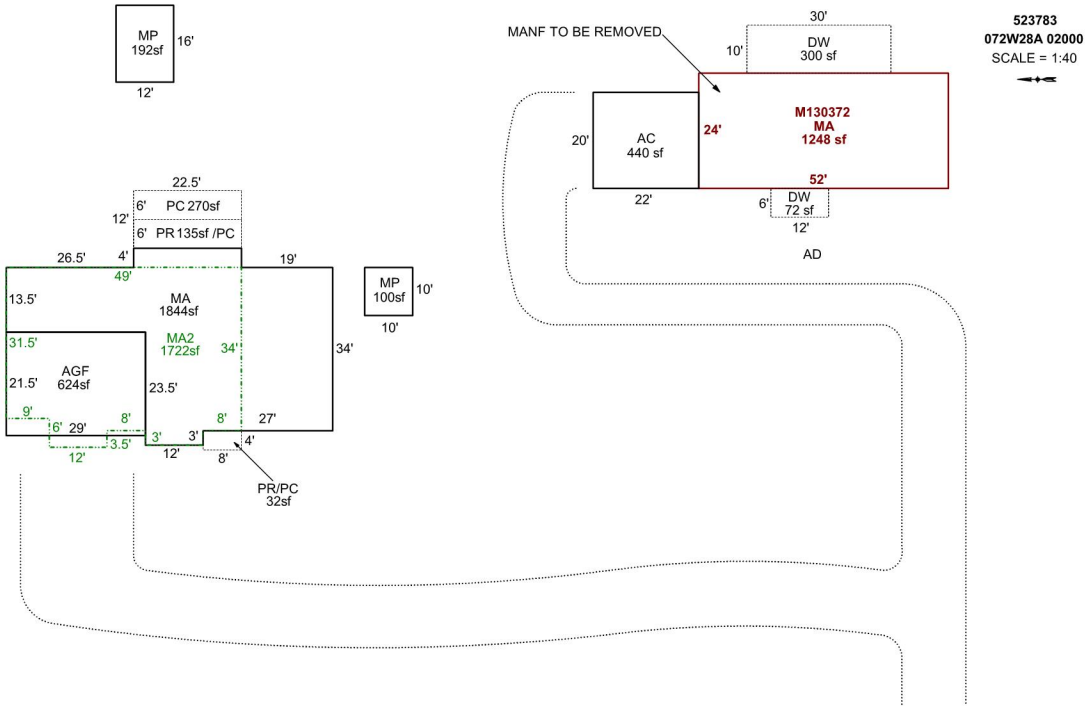

Sketch by Apex Sketch

AREA CALCULATIONS SUMMARY

Code	Description	Factor	Net Size	Perimeter	Net Totals
GLA1	MA	1.0	1248.0	152.0	
	MA	1.0	1843.5	218.0	3091.5
GLA2	MA2	1.0	1721.5	179.0	1721.5
GAR	AC	1.0	440.0	84.0	
	AGF	1.0	623.5	101.0	
	MP	1.0	192.0	56.0	
	MP	1.0	100.0	40.0	1355.5
P/P	DW	1.0	300.0	80.0	
	DW	1.0	72.0	36.0	
	PC	1.0	270.0	69.0	
	PR/PC	1.0	32.0	24.0	
	PR	1.0	135.0	57.0	809.0
	Net LIVABLE	cnt	3	(rounded)	4,813

COMMENT TABLE 1

DRAWN BY JRONDEMA 12/15/17
UPDATED BY CJURAN 07/13/2021 555-21-003918
UPDATED BY CJURAN 03/13/2023
UPDATED BY CJURAN 02/08/2024

COMMENT TABLE 2

MLH 11/08/2022
GRH 11/07/2023

COMMENT TABLE 3

TAGS L3
TAGS L3

© Starcap Marketing, LLC. dba Apex Software

SKETCH/AREA TABLE ADDENDUM

SUBJECT INFO

File No.: R23783 Parcel No.: 072W28A 02000
Property Address: 402 63RD AV NE
City: SALEM County: MARION State: OR ZipCode: 97317
Owner:
Client: Client Address:
Appraiser Name: Inspection Date:

SKETCH

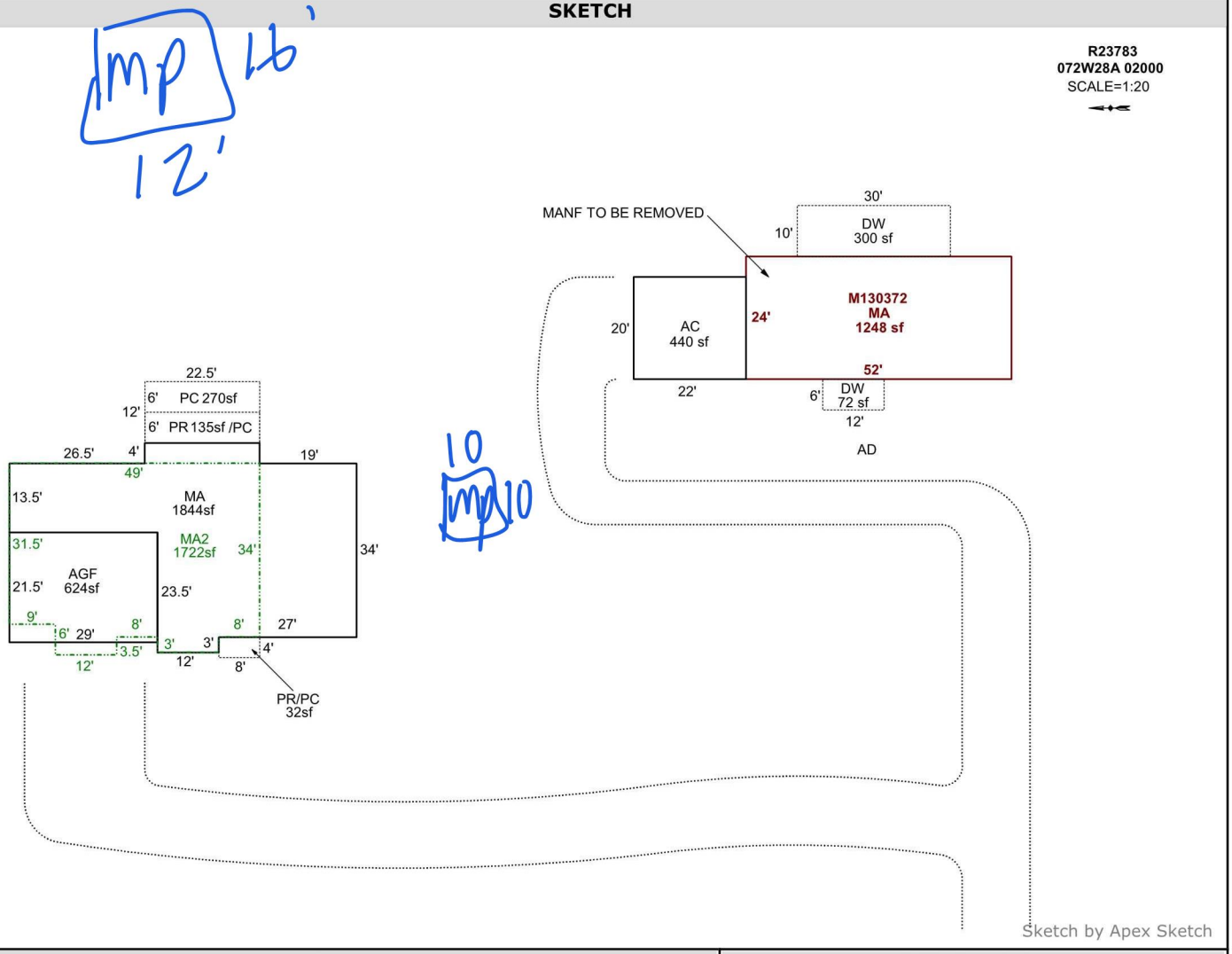

Sketch by Apex Sketch

AREA CALCULATIONS SUMMARY

Code	Description	Factor	Net Size	Perimeter	Net Totals
GLA1	MA	1.0	1248.0	152.0	
	MA	1.0	1843.5	218.0	3091.5
GLA2	MA2	1.0	1721.5	179.0	1721.5
GAR	AC	1.0	440.0	84.0	
	AGF	1.0	623.5	101.0	1063.5
P/P	DW	1.0	300.0	80.0	
	DW	1.0	72.0	36.0	
	PC	1.0	270.0	69.0	
	PR/PC	1.0	32.0	24.0	
	PR	1.0	135.0	57.0	809.0
	Net LIVABLE	cnt	3	(rounded)	4,813

COMMENT TABLE 1

DRAWN BY JRONDEMA 12/15/17
UPDATED BY CJURAN 07/13/2021 555-21-003918

COMMENT TABLE 2

GPA 11/7/23

COMMENT TABLE 3

TAGS L3

© Starcap Marketing, LLC. dba Apex Software