Summary Lead Appr: WW 3.25.25 Clerk: Lead Clerk: Appr: MLH 3/31/25 Print Date: 12/20/2024

Acct ID: 523781 MTL: 072W28D000200 Date: 3/18/25 Appr: MLH Prop Class: 401 RMV Prop Class: 401

Situs: 6254 SPARKY LN NE SALEM OR 97317 MaSaNh: 03 06 000 Unit: 70507 Year: 2025

Last Date Appraised: 09/18/2015 Appraiser: MATTHEW HAMILTON Retag: Y N Tag info:

Owner: FEDORENKO, BENJAMIN Roll Type: R

Cycle Tag Sales Verification Other: Inspection level: 1 2 3 4 LCB TTO INSP AV: 365430

RMV Land: 344460 RMV Imp: 285270 RMV Total: 629730 MAV: 365430 MSAV: 0 SAV: 0

Comment: MLS 818623
DOM 140

Notations Sales Code 30 Update inventory Input MLH 3/25/25

No notation data available.

OSDs

Count	Code	Description	RMV	Code Area	Exception
1	MKTF	OSD - FAIR	40000	92410	0

Land

Site: 1 Code Area: 92410 Size: 5.76 Acres Use Code: 004 Zone: NREST SAV Use: Exception: 0

Class: 2BD Value Source: Rural at MKT Description: RMV: 304460 Exception: Y N

Adjustment(s): GSOIL Fire Patrol: Description:

Comments: 16-17: CYCLE WORK PER #90 CHG OSD// 05-06: RECALC SETUP;#36 6/16/04

Improvements - Residence / Manufactured Structures

Bldg: 1 Code Area: 92410 Stat Class: 131 Year Blt: 1990 Eff Year Blt: ~~1997~~ 1990 Sq.Ft: 1408 % Complete: 100

Desc: One Story Only Dimensions: RMV: 213700

Func Obsc: 100 Econ %: 100 Other %: 100 Exception: 0 Adjust: Adjust RMV: 0 I/O

Floors

Type	Class	Display Group	Floor Size	Beds	Baths	Yr Blt	Eff Yr Blt	Inventory	
First Floor	3	Finished	1408	2	FB-1	1990	~~1997~~	ROOF, FP - 1, HVAC, KIT-, BATH - 1	Exception: Y N
Garage Attached	3	Unfinished	896	0	0	1997	~~1997~~	ROOF	Exception: Y N

Accessories

Description	Class	Size SqFt	Eff Yr Blt	RMV	Quantity
No accessory data available					

Bldg: 3 Code Area: 92410 Stat Class: ~~455~~ 457 Year Blt: 1984 Eff Year Blt: ~~1990~~ 1984 Sq.Ft: 1920 % Complete: 100

Desc: MANUF STRUCT, CLASS 5, 20' WIDE DOUBLE Dimensions: RMV: 70690

Func Obsc: 100 Econ %: 100 Other %: 100 Exception: 0 Adjust: Adjust RMV: 0 I/O

Floors

Type	Class	Display Group	Floor Size	Beds	Baths	Yr Blt	Eff Yr Blt	Inventory	
First Floor	5	Finished	1920	~~0~~ 3	FB-2	1984	1990	FP - 1, SKIRT, KIT- HVAC, Roof + 2 Bath	Exception: Y N

Accessories

Description	Class	Size SqFt	Eff Yr Blt	RMV	Quantity
No accessory data available					

Improvements - Accessory Buildings

Bldg: 2 Code Area: 92410 Stat Class: 341 Year Blt: Eff Year Blt: Sq.Ft: 126 % Complete: 100

Desc: Multi Purpose Shed (MP) Dimensions: 14x9 RMV: 0

Func Obsc: 0 Econ %: 100 Other %: 100 Exception: 0 Adjust: Adjust RMV: 0

delete

Floors

Type	Class	Display Group	Floor Size	Beds	Baths	Yr Blt	Eff Yr Blt	Inventory	
Multi-Purpose Bldg	4	Finished	126	0	0	0	0		Exception: Y N

Accessories

Description	Class	Size SqFt	Eff Yr Blt	RMV	Quantity
No accessory data available					

Bldg: 4 Code Area: 92410 Stat Class: 351 Year Blt: 1999 Eff Year Blt: 1999 Sq.Ft: 1728 % Complete: 100

Desc: General Purpose Building (GB) Dimensions: 48x36 RMV: 0

Func Obsc: 0 Econ %: 100 Other %: 100 Exception: 0 Adjust: Adjust RMV: 0 N/C

Floors

Type	Class	Display Group	Floor Size	Beds	Baths	Yr Blt	Eff Yr Blt	Inventory	
General Purpose Bldg	5	Finished	1728	0	0	1999	1999	FAIR	Exception: Y N

Accessories

Description	Class	Size SqFt	Eff Yr Blt	RMV	Quantity
No accessory data available					

Bldg: 5 Code Area: 92410 Stat Class: 354 Year Blt: 2000 Eff Year Blt: 2000 Sq.Ft: 420 % Complete: 100

Desc: Lean-to Light (LTL) Dimensions: 30x14 RMV: 880

Func Obsc: 100 Econ %: 100 Other %: 100 Exception: 0 Adjust: Adjust RMV: 0

N/C

Floors

Type	Class	Display Group	Floor Size	Beds	Baths	Yr Blt	Eff Yr Blt	Inventory	
Lean-to Light Duty	4	Finished	420	0	0	2000	2000		Exception: Y N

Accessories

Description	Class	Size SqFt	Eff Yr Blt	RMV	Quantity
No accessory data available					

354 LTL 1983 16x8 I/O

107 YI3F 1990 I/O

SKETCH/AREA TABLE ADDENDUM

SUBJECT INFO

File No.: 523781 Parcel No.: 072W28D 00200
Property Address: 113 JADE HILLS DR
City: SILVERTON County: MARION State: OR ZipCode: 97381
Owner:
Client: Client Address:
Appraiser Name: Inspection Date:

SKETCH

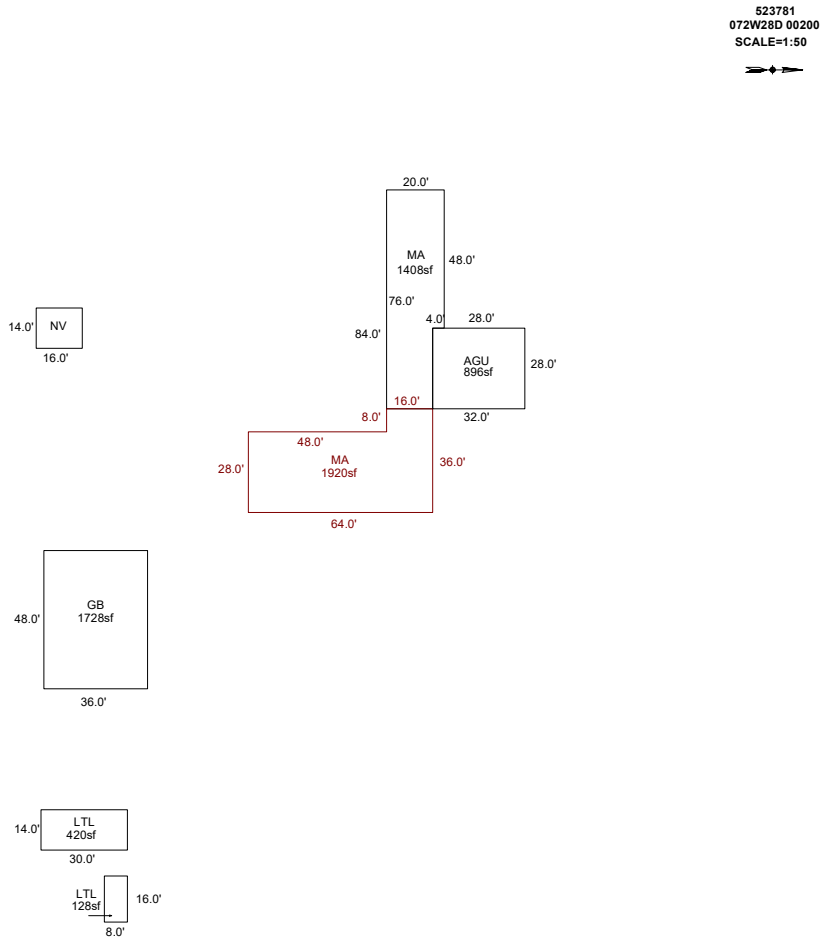

Sketch by ApexSketch

AREA CALCULATIONS SUMMARY

Code	Description	Factor	Net Size	Perimeter	Net Totals
GBA1	LTL	1.0	420.0	88.0	
	LTL	1.0	128.0	48.0	548.0
GBA2	GB	1.0	1728.0	168.0	1728.0
GLA1	MA	1.0	1408.0	192.0	
	MA	1.0	1920.0	200.0	3328.0
GAR	AGU	1.0	896.0	120.0	896.0

Net LIVABLE	cnt	0	(rounded)	3,328
Net BUILDING	cnt	3	(rounded)	2,276

COMMENT TABLE 1

DRAWN BY JRONDEMA 11/3/15
UPDATED BY CLOBERG 03/24/25

COMMENT TABLE 2

MLH 03/18/25

COMMENT TABLE 3

SV L4

© iLOOKABOUT (US) Inc. dba Apex Software

R23781

072W28D 00200

SCALE=1:50

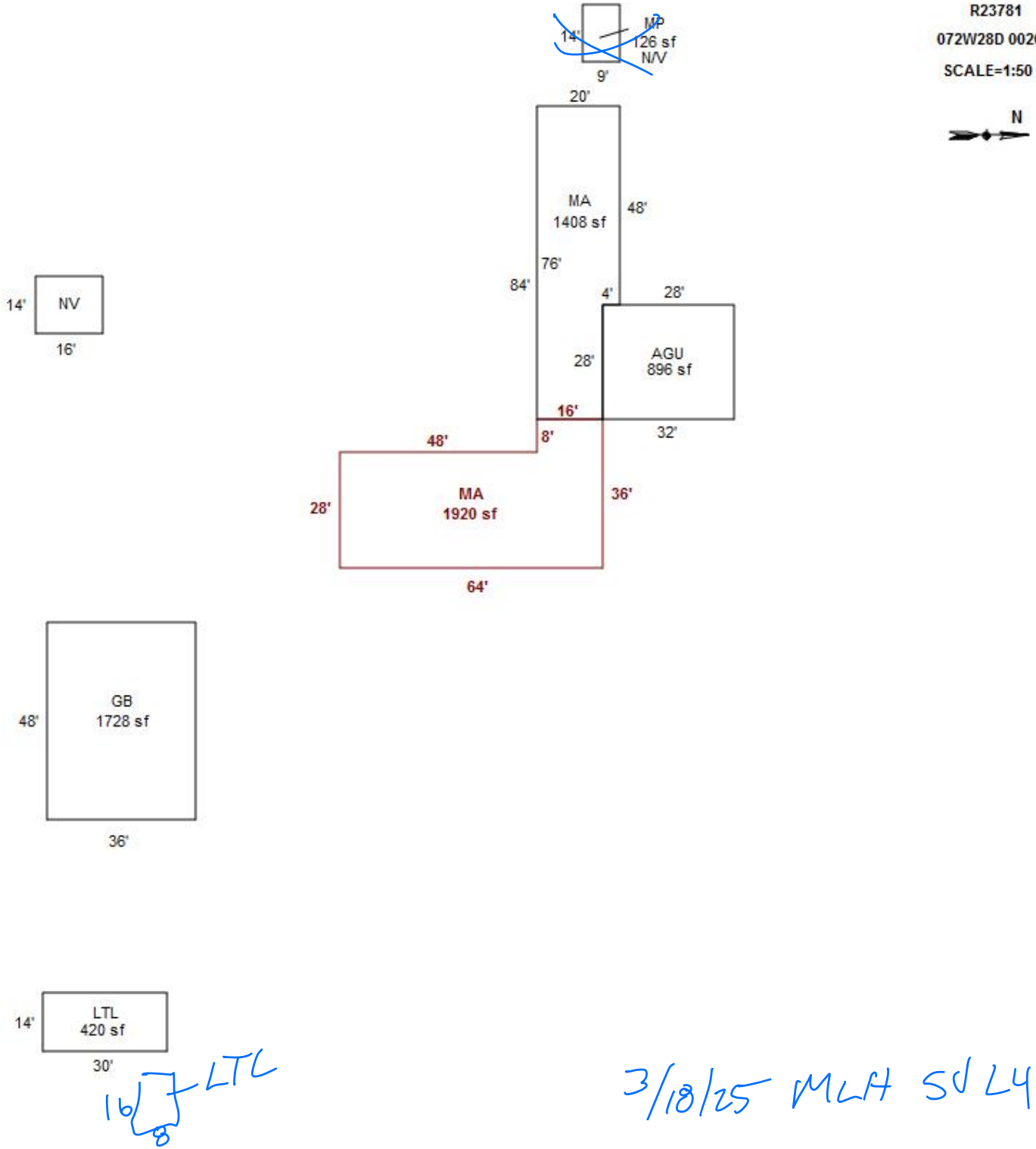

Sketch by Apex Sketch

R23781 LTL 30 x 14 9/18/15

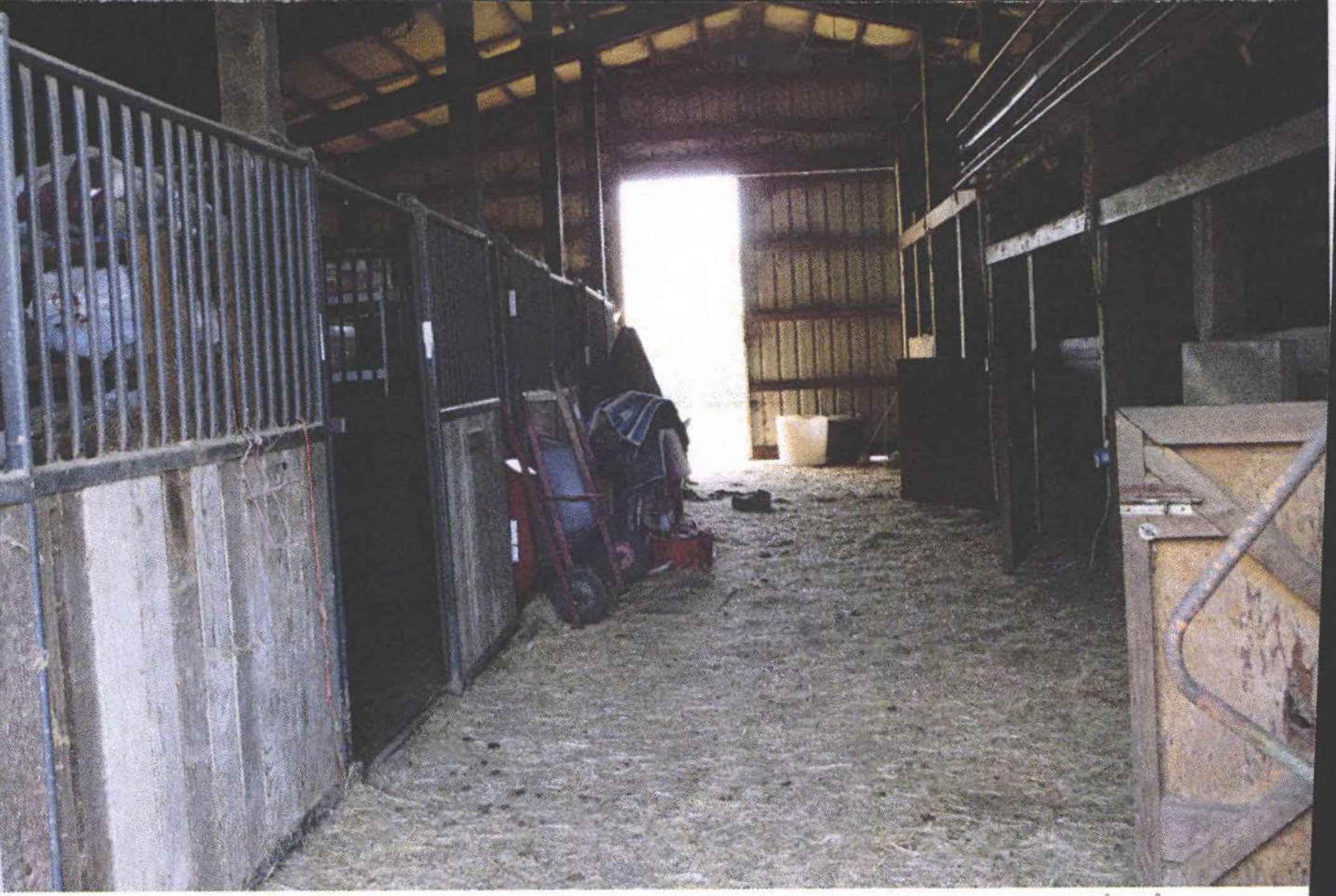

R23781 GB 48×36 8 horse stalls 9/18/15

R23781 GB 48 x 36 9/18/15

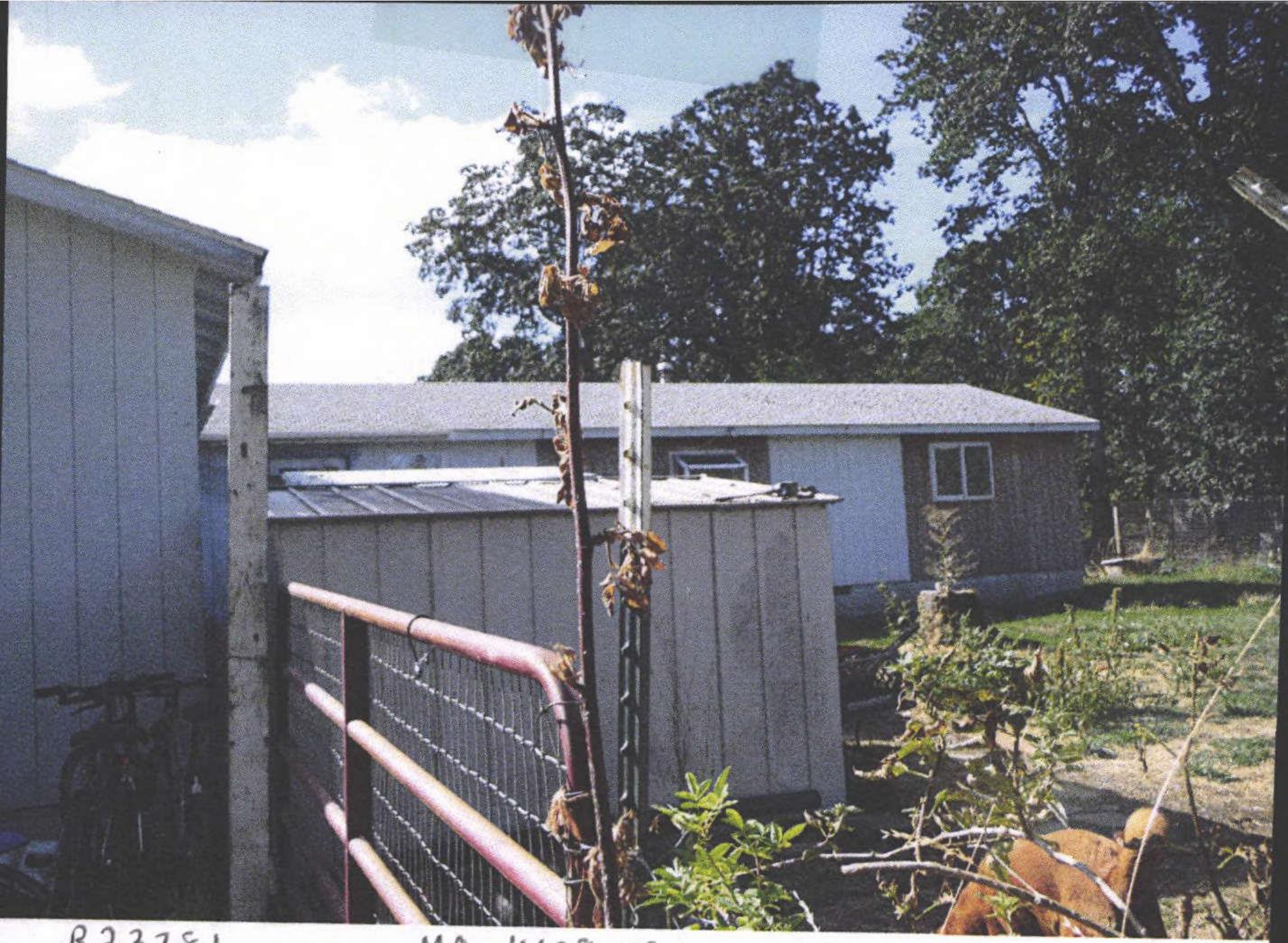

R23781 MA 1408 SE – north 9/18/15

R23781 MA 1408 SE / MA 1920 SE 9/18/15

R 23781 MA 1920 SF + AGF 9/18/15