Summary Lead Appr: WW 12/2 Clerk: Lead Clerk: Appr: MDL Input 11/24/25 Print Date: 9/26/2025

Acct ID: 609067 MTL: 092W18B000701 Date: 11/20/25 Appr: MDL Prop Class: 401 RMV Prop Class: 401

Situs: 11061 WINTER WAY SE TURNER OR 97392 MaSaNh: 07 06 002 Unit: 127823 Year: 2025

Last Date Appraised: 01/14/2025 Appraiser: MATT LORD Tag: Y N Tag info: 2026 - Tags/Permit (Completion)

Owner: POPE, JONATHAN HOWARD Last Sales Date: Roll Type: R

Cycle Tag Sales Verification Other: Inspection level: 1 2 3 4 LCB TTO INSP AV: 162900

RMV Land: 324640 RMV Imp: 173880 RMV Total: 498520 MAV: 63240 MSAV: 0 SAV: 0

Comment: 25-26: L2 MDL 1.14.25 TAG 24-000618

OSDs

26-27 ; NSFD → 85% complete

Count	Code	Description	RMV	Code Area	Exception
1	MKTN	OSD - NO LANDSCAPE	35000	05590	16700

Land

Site: 0 Code Area: 05590 Size: 3.03 Acres Use Code: 004 Zone: NREST SAV Use: Exception: 0

Class: 4HD Value Source: Rural at MKT Description: FOUR HILL DRY RMV: 289640 Exception: Y N

Adjustment(s): Fire Patrol: Description:

Comments: 25-26 ADDED LAND CLASS

Improvements - Residence / Manufactured Structures

Bldg: 1 Code Area: 05590 Stat Class: 142 Year Blt: 2024 Eff Year Blt: 2024 Sq.Ft: 336 % Complete: ~~50.00~~ 85%

Desc: Multi Story above grade Dimensions: RMV: 173880

Func Obsc: 100 Econ %: 100 Other %: 100 Exception: 82960 Adjust: Adjust RMV: 0

Floors

Type	Class	Display Group	Floor Size	Beds	Baths	Yr Blt	Eff Yr Blt	Inventory	
Attic	4	Finished	336	1	FB-1	2024	2024	BATH - 1	Exception: Y N
Attic	4	Unfinished	364	0	0	2024	2024		Exception: Y N
Garage Attached	4	Finished	3120	1	FB-1	2024	2024	ROOF	Exception: Y N

Accessories

Description	Class	Size SqFt	Eff Yr Blt	RMV	Quantity
No accessory data available					

SKETCH/AREA TABLE ADDENDUM

SUBJECT INFO

File No.: 609067 Parcel No.: 092W18B000701
Property Address: 11061 WINTER WAY SE
City: TURNER County: MARION State: OR ZipCode: 97392
Owner:
Client: Client Address:
Appraiser Name: Inspection Date:

SKETCH

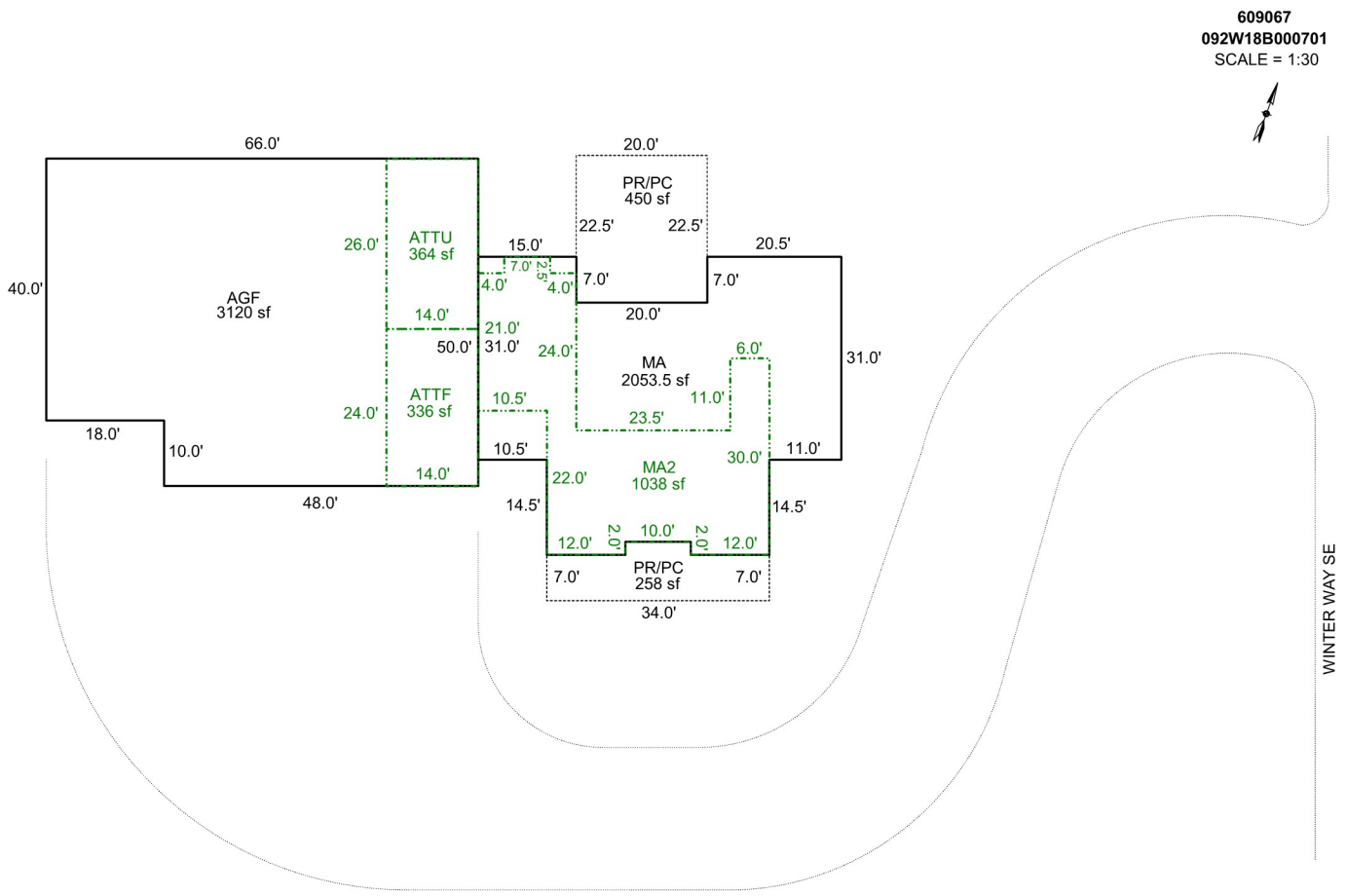

Sketch by Apex Sketch

AREA CALCULATIONS SUMMARY

Code	Description	Factor	Net Size	Perimeter	Net Totals
GLA1	MA	1.0	2053.5	220.0	2053.5
GLA2	MA2	1.0	1038.0	206.0	1038.0
GAR	AGF	1.0	3120.0	232.0	
	ATTF	1.0	336.0	76.0	
	ATTU	1.0	364.0	80.0	3820.0
P/P	PR/PC	1.0	258.0	86.0	
	PR/PC	1.0	450.0	85.0	708.0
	Net LIVABLE	cnt	2	(rounded)	3,092

COMMENT TABLE 1

APEX BY CJURAN 04/09/2024 24-000618 MA

COMMENT TABLE 2

COMMENT TABLE 3

© Starcap Marketing, LLC. dba Apex Software

Summary Lead Appr:_____ Clerk:_____ Lead Clerk:_____ Appr: MDL Inspd 2/18/25

Print Date: 9/24/2024

Acct ID: 609067 MTL: 092W18B000701 Date: 1/14/25 Appr: MDL Prop Class: ~~400~~ 401 RMV Prop Class: ~~400~~ 401

Situs: 11061 WINTER WAY SE TURNER OR 97392 MaSaNh: 07 06 002 Unit: 127823 Year: ~~2024~~ 2025

Last Date Appraised: Appraiser: MATT LORD Retag: (Y) N Tag info: 2025 - NEW CONSTRUCTION (Residence)

Owner: POPE, JONATHAN HOWARD Roll Type: R

Cycle (Tag) Sales Verification Other:_____ Inspection level: 1 (2) 3 4 LCB TTO INSP AV: 61400

RMV Land: 126280 RMV Imp: 0 RMV Total: 126280 MAV: 0 MSAV: 0 SAV: 0

Comment: 24-000618 NSFD

Notations

25-26: AGF @ 50% Complete/No Start on MAIN House Exception

ADD YI 2025-26

No notation data available.

OSDs

No OSD data available.

OSD N

Land

Site: 0 Code Area: 05590 Size: 3.03 Acres Use Code: 004 Zone: NREST SAV Use: Exception: 61400

Class: WHD Value Source: Rural at MKT Description: RMV: 126280 Exception: Y N

Adjustment(s): Fire Patrol: Description:

Comments:

Improvements - Residence / Manufactured Structures

No residence or manufactured structure improvement data available.

Improvements - Accessory Buildings

No improvement data available for all other stat class types.

ACCOUNT # 609067 DATE: 11/14/24 RMV CLASS 401 PROP CLASS
MTL APPR MDL TAG Y N
COMMENTS:

RESIDENCE / MANUFACTURED STRUCTURES

STAT 5 QLTY + - FLOOR MA
AREA 2053 EFF AREA 2053 BED 1
ROOF + HVAC +
BATH PKG: 1.5 BATH BATH + 1/2 BTH
FIREPLACE: 1
KITCHEN - +
YR BLT 2024 EFF YR 2024 ECON
% COMP 0 % GOOD FUNC
EXCEPT Y N LUMP SUM:
MISC:
YI CLASS F G A E
SKIRT + LIN FT
COMMENT: Patio / out Door Fireplace
25-26 Not started

STAT 5 QLTY + - FLOOR MA2
AREA 1038 EFF AREA 1038 BED 2
ROOF + HVAC +
BATH PKG: 1 BATH BATH + 1/2 BTH
FIREPLACE:
KITCHEN - +
YR BLT 2024 EFF YR 2024 ECON
% COMP 0 % GOOD FUNC
EXCEPT Y N LUMP SUM:
MISC:
YI CLASS F G A E
SKIRT + LIN FT
COMMENT:
2526 Not started

STAT QLTY + - FLOOR
AREA EFF AREA BED
ROOF + HVAC +
BATH PKG: BATH BATH + 1/2 BTH
FIREPLACE:
KITCHEN - +
YR BLT EFF YR ECON
% COMP % GOOD FUNC
EXCEPT Y N LUMP SUM:
MISC:
YI CLASS F G A E
SKIRT + LIN FT
COMMENT:

ACCESSORY IMPROVEMENTS / OUTBUILDINGS

TYPE ATU
STAT / CLASS 5
SIZE 364
FAIR
AVERAGE
GOOD
EXCELLENT
BATH
YR BLT 2024
EFF YR 2024
% COMP 50
EXCEPT Y N
MISC:
COMMENT:

TYPE AGF
STAT / CLASS 5
SIZE 3120
FAIR
AVERAGE
GOOD
EXCELLENT
BATH
YR BLT 2024
EFF YR 2024
% COMP 50
EXCEPT Y N
MISC:
COMMENT:

TYPE ATF
STAT / CLASS 5
SIZE 336
FAIR
AVERAGE
GOOD
EXCELLENT 1BED
BATH 1
YR BLT 2024
EFF YR 50
% COMP
EXCEPT Y N
MISC:
COMMENT:

TYPE
STAT / CLASS
SIZE
FAIR
AVERAGE
GOOD
EXCELLENT
BATH
YR BLT
EFF YR
% COMP
EXCEPT Y N
MISC:
COMMENT:

Percent Complete Form

Account # 609067

Additions

New Homes

% Item	% Sum		No Basement % Item	No Basement % Sum	Basement % Item	Basement % Sum
3%	0%	Plans/Survey	3%	0%	3%	0%
2%		Excavation	2%		4%	
3%		Foundation	3%		10%	
35%	45%	Framing	14%	20%	16%	35%
8%	50%	Trusses	7%	30%	7%	40%
7%	60%	Roofing	7%	35%	7%	45%
7%	65%	Windows/Ext Doors	7%	45%	6%	55%
5%	70%	Siding	5%	50%	5%	60%
4%	75%	Plumbing Rough-In	4%		3%	
3%		Electrical Rough-In	3%	55%	2%	65%
2%	80%	Heating Rough-In	2%		1%	
		Heating Unit	1%	60%	1%	
3%		Insulation	3%		2%	
5%	85%	Drywall (Finished)	5%	65%	4%	70%
2%	90%	Paint Interior	2%	70%	2%	75%
2%		Paint Exterior	2%		2%	
		Cabinets	6%	75%	5%	80%
2%	95%	Electrical Fixtures	3%	80%	2%	
2%		Plumbing Fixtures	4%	85%	3%	85%
3%	100%	Floor Coverings & Countertops	7%	90%	6%	90%
2%		Interior Trim Carpentry	7%	95%	6%	95%
		Porch/Entry/Stoop	2%	100%	2%	100%
		Finish Grade	1%		1%	

APPR	MDL	Date	11/14/24	YR For	25-26	% COMP	50
APPR	MDL	Date	11/20/25	YR For	26-27	% COMP	85%
APPR		Date		YR For		% COMP	
APPR		Date		YR For		% COMP	

Percent Complete Form

Account # _____

Gut & Remodels

Interior Trim Carpentry	7%	90%
Floor Coverings & Countertops	7%	85%
Plumbing Fixtures	4%	80%
Electrical Fixtures	3%	80%
Cabinets	6%	75%
Drywall (Finished)	5%	70%
Insulation	3%	65%

APPR		Date		YR For		% COMP	
APPR		Date		YR For		% COMP	
APPR		Date		YR For		% COMP	
APPR		Date		YR For		% COMP	

Outbuilding Type:_____

	% Item	% Sum
Excavation/Foundation	10%	40%
Floor - Concrete/Wood	30%	
Walls - Framing	10%	65%
Walls - Covering/Siding	15%	
Roof - Framing/Trusses	15%	95%
Roof - Sheathing	5%	
Roof - Cover	10%	
Doors & Windows	5%	100%

APPR		Date		YR For		% COMP	
APPR		Date		YR For		% COMP	
APPR		Date		YR For		% COMP	
APPR		Date		YR For		% COMP	

SKETCH/AREA TABLE ADDENDUM

SUBJECT INFO

File No.: 609067 Parcel No.: 092W18B000701
Property Address: 11061 WINTER WAY SE
City: TURNER County: MARION State: OR ZipCode: 97392
Owner:
Client: Client Address:
Appraiser Name: Inspection Date:

SKETCH

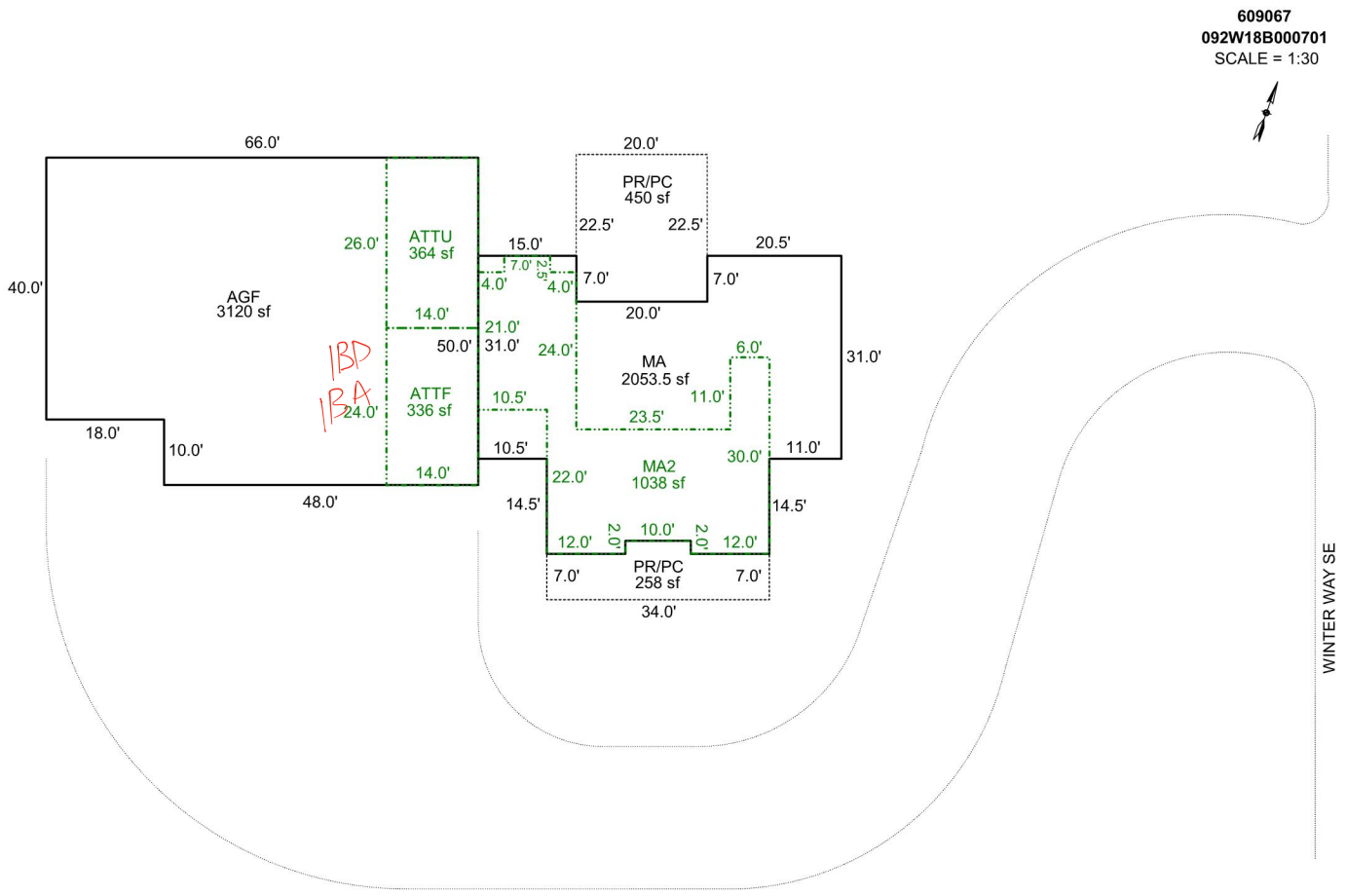

Sketch by Apex Sketch

AREA CALCULATIONS SUMMARY

Code	Description	Factor	Net Size	Perimeter	Net Totals
GLA1	MA	1.0	2053.5	220.0	2053.5
GLA2	MA2	1.0	1038.0	206.0	1038.0
GAR	AGF	1.0	3120.0	232.0	
	ATTF	1.0	336.0	76.0	
	ATTU	1.0	364.0	80.0	3820.0
P/P	PR/PC	1.0	258.0	86.0	
	PR/PC	1.0	450.0	85.0	708.0
	Net LIVABLE	cnt	2	(rounded)	3,092

COMMENT TABLE 1

APEX BY CJURAN 04/09/2024 24-000618 MA

COMMENT TABLE 2

COMMENT TABLE 3

© Starcap Marketing, LLC. dba Apex Software

1/14/25

Summary Lead Appr: WW 2.18.25 Clerk: Lead Clerk: Appr: MDL Inspd 2/18/25 Print Date: 9/24/2024

Acct ID: 609067 MTL: 092W18B000701 Date: 1/14/25 Appr: MDL Prop Class: ~~400~~ 401 RMV Prop Class: ~~400~~ 401

Situs: 11061 WINTER WAY SE TURNER OR 97392 MaSaNh: 07 06 002 Unit: 127823 Year: ~~2024~~ 2025

Last Date Appraised: Appraiser: MATT LORD Retag: Y N Tag info: 2025 - NEW CONSTRUCTION (Residence)

Owner: POPE, JONATHAN HOWARD Roll Type: R

Cycle Tag Sales Verification Other: Inspection level: 1 2 3 4 LCB TTO INSP AV: 61400

RMV Land: 126280 RMV Imp: 0 RMV Total: 126280 MAV: 0 MSAV: 0 SAV: 0

Comment: 24-000618 NSFD

Notations

25-26: AGF @ 50% Complete/No Start on MAIN House Exception

ADD YI 2025-26

No notation data available.

OSDs

No OSD data available.

OSD N

Land

NO UNIT NREST

Site: 0 Code Area: 05590 Size: 3.03 Acres Use Code: 004 Zone: NREST SAV Use: Exception: 61400

Class: WHD Value Source: Rural at MKT Description: RMV: 126280 Exception: Y N

Adjustment(s): Fire Patrol: Description:

Comments:

Improvements - Residence / Manufactured Structures

No residence or manufactured structure improvement data available.

Improvements - Accessory Buildings

No improvement data available for all other stat class types.

ACCOUNT # 609067 DATE: 11/14/24 RMV CLASS 401 PROP CLASS
MTL APPR MDL TAG Y N
COMMENTS:

RESIDENCE / MANUFACTURED STRUCTURES

STAT 5 QLTY + - FLOOR MA
AREA 2053 EFF AREA 2053 BED 1
ROOF + HVAC +
BATH PKG: 1.5 BATH BATH + 1/2 BTH
FIREPLACE: 1
KITCHEN - +
YR BLT 2024 EFF YR 2024 ECON
% COMP 0 % GOOD FUNC
EXCEPT Y N LUMP SUM:
MISC:
YI CLASS F G A E
SKIRT + LIN FT
COMMENT: Patio / out Door Fireplace
25-26 Not started

STAT 5 QLTY + - FLOOR MA2
AREA 1038 EFF AREA 1038 BED 2
ROOF + HVAC +
BATH PKG: 1 BATH BATH + 1/2 BTH
FIREPLACE:
KITCHEN - +
YR BLT 2024 EFF YR 2024 ECON
% COMP 0 % GOOD FUNC
EXCEPT Y N LUMP SUM:
MISC:
YI CLASS F G A E
SKIRT + LIN FT
COMMENT:
2526 Not started

STAT QLTY + - FLOOR
AREA EFF AREA BED
ROOF + HVAC +
BATH PKG: BATH BATH + 1/2 BTH
FIREPLACE:
KITCHEN - +
YR BLT EFF YR ECON
% COMP % GOOD FUNC
EXCEPT Y N LUMP SUM:
MISC:
YI CLASS F G A E
SKIRT + LIN FT
COMMENT:

ACCESSORY IMPROVEMENTS / OUTBUILDINGS

TYPE ATU
STAT / CLASS 5
SIZE 364
FAIR
AVERAGE
GOOD
EXCELLENT
BATH
YR BLT 2024
EFF YR 2024
% COMP 50
EXCEPT Y N
MISC:
COMMENT:

TYPE AGF
STAT / CLASS 5
SIZE 3120
FAIR
AVERAGE
GOOD
EXCELLENT
BATH
YR BLT 2024
EFF YR 2024
% COMP 50
EXCEPT Y N
MISC:
COMMENT:

TYPE ATF
STAT / CLASS 5
SIZE 336
FAIR
AVERAGE
GOOD
EXCELLENT 1BED
BATH 1
YR BLT 2024
EFF YR 50
% COMP
EXCEPT Y N
MISC:
COMMENT:

TYPE
STAT / CLASS
SIZE
FAIR
AVERAGE
GOOD
EXCELLENT
BATH
YR BLT
EFF YR
% COMP
EXCEPT Y N
MISC:
COMMENT:

Percent Complete Form

Account # 609067

Additions

New Homes

AGF

% Item	% Sum		No Basement % Item	No Basement % Sum	Basement % Item	Basement % Sum
3%		Plans/Survey	3%		3%	
2%	0%	Excavation	2%	0%	4%	0%
3%		Foundation	3%		10%	
35%	45%	Framing	14%	20%	16%	35%
8%	50%	Trusses	7%	30%	7%	40%
7%	60%	Roofing	7%	35%	7%	45%
7%	65%	Windows/Ext Doors	7%	45%	6%	55%
5%	70%	Siding	5%	50%	5%	60%
4%	75%	Plumbing Rough-In	4%		3%	
3%		Electrical Rough-In	3%	55%	2%	
2%		Heating Rough-In	2%		1%	65%
	80%	Heating Unit	1%	60%	1%	
3%		Insulation	3%		2%	
5%	85%	Drywall (Finished)	5%	65%	4%	70%
2%	90%	Paint Interior	2%	70%	2%	75%
2%		Paint Exterior	2%		2%	
		Cabinets	6%	75%	5%	80%
2%		Electrical Fixtures	3%	80%	2%	
2%	95%	Plumbing Fixtures	4%	85%	3%	85%
3%		Floor Coverings & Countertops	7%	90%	6%	90%
2%	100%	Interior Trim Carpentry	7%	95%	6%	95%
		Porch/Entry/Stoop	2%	100%	2%	100%
		Finish Grade	1%		1%	

APPR	MDL	Date	11/14/24	YR For	25-26	% COMP	50
APPR		Date		YR For		% COMP	
APPR		Date		YR For		% COMP	
APPR		Date		YR For		% COMP	

Percent Complete Form

Account # _____

Gut & Remodels

Interior Trim Carpentry	7%	90%
Floor Coverings & Countertops	7%	85%
Plumbing Fixtures	4%	80%
Electrical Fixtures	3%	80%
Cabinets	6%	75%
Drywall (Finished)	5%	70%
Insulation	3%	65%

APPR		Date		YR For		% COMP	
APPR		Date		YR For		% COMP	
APPR		Date		YR For		% COMP	
APPR		Date		YR For		% COMP	

Outbuilding Type:_____

	% Item	% Sum
Excavation/Foundation	10%	40%
Floor - Concrete/Wood	30%	
Walls - Framing	10%	65%
Walls - Covering/Siding	15%	
Roof - Framing/Trusses	15%	
Roof - Sheathing	5%	95%
Roof - Cover	10%	
Doors & Windows	5%	100%

APPR		Date		YR For		% COMP	
APPR		Date		YR For		% COMP	
APPR		Date		YR For		% COMP	
APPR		Date		YR For		% COMP	

SKETCH/AREA TABLE ADDENDUM

SUBJECT INFO

File No.: 609067 Parcel No.: 092W18B000701
Property Address: 11061 WINTER WAY SE
City: TURNER County: MARION State: OR ZipCode: 97392
Owner:
Client: Client Address:
Appraiser Name: Inspection Date:

SKETCH

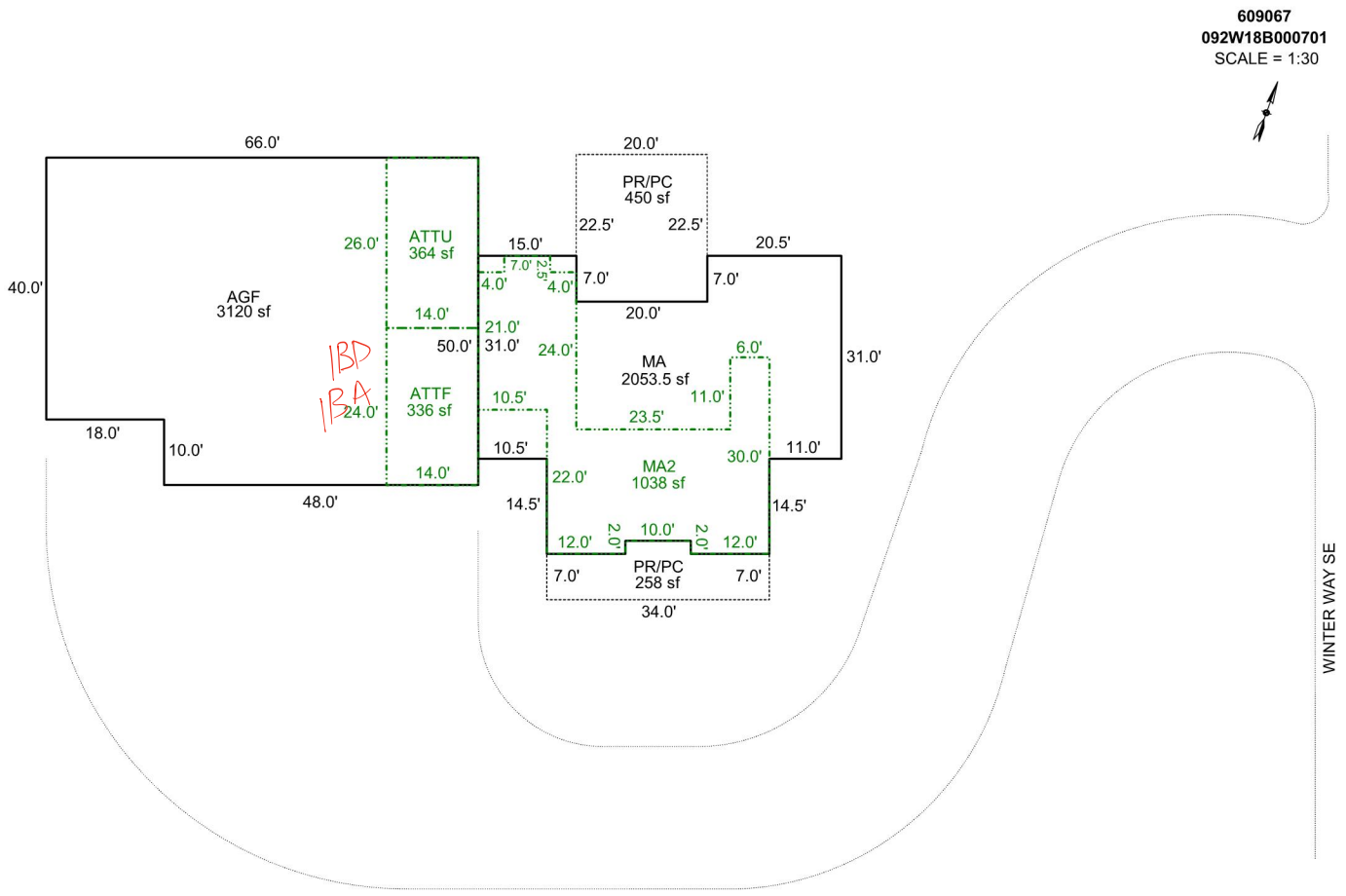

Sketch by Apex Sketch

AREA CALCULATIONS SUMMARY

Code	Description	Factor	Net Size	Perimeter	Net Totals
GLA1	MA	1.0	2053.5	220.0	2053.5
GLA2	MA2	1.0	1038.0	206.0	1038.0
GAR	AGF	1.0	3120.0	232.0	
	ATTF	1.0	336.0	76.0	
	ATTU	1.0	364.0	80.0	3820.0
P/P	PR/PC	1.0	258.0	86.0	
	PR/PC	1.0	450.0	85.0	708.0
	Net LIVABLE	cnt	2	(rounded)	3,092

COMMENT TABLE 1

APEX BY CJURAN 04/09/2024 24-000618 MA

COMMENT TABLE 2

COMMENT TABLE 3

© Starcap Marketing, LLC. dba Apex Software

1/14/25

Assessor Monthly Issued Permit Report

For 3/1/2024 to 3/31/2024

PERMIT#:	555-24-000618-DWL	STATUS:	Permit Issued
PERMIT TYPE:	Residential	APPLIED:	1/24/2024
SUB-TYPE:	1 & 2 Fam Dwelling (New Only)	ISSUED:	3/22/2024
CATEGORY:	Comprehensive	EXPIRES:	9/18/2024

OFFICE: MC

PARCEL#: TEMP0MC

ACRES: 0

SUBDIV:

LOT/BLOCK: /

ADDRESS: 11061 WINTER WAY SE TURNER, OR 97392

RELATIONSHIP	NAME	ADDRESS	PHONE
APPLICANT	POPE, JONATHAN HOWARD	3635 SUNSET HILLS DR SE TURNER, OR 97392	503.302.6352
OWNER	POPE, JONATHAN HOWARD	3635 SUNSET HILLS DR SE TURNER, OR 97392	
OWNER (PROPERTY)	SEE PROPERTY OWNER INFORMATION	OR	
SITE CONTACT	POPE, JONATHAN HOWARD	3635 SUNSET HILLS DR SE TURNER, OR 97392	503.302.6352

CONST CAT: Single Family Dwelling

WORK TYPE: New

WORK DESC: NSFD 4 BD 4 BATH ATTACHED GAR.

VALUATION: $862,151.07

STORIES: 2

BATHS: 4 KITCHENS: 1

SQUARE FEET

HABITABLE: 3783

EXISTING:

NEW:

TOTAL SQ. FT.: 6526

OCCUPANCY	CONSTRUCTION TYPE	SQ FT or # OF SPACES
R-3 1 & 2 family	VB	3783 Sq Ft
U Utility, misc.	VB	3120 Sq Ft
U Utility, misc. - half rate	VB	649 Sq Ft