SKETCH/AREA TABLE ADDENDUM

SUBJECT INFO

File No.: 109966 Parcel No.: 052W01DD01200
Property Address: 1916 KING WAY
City: WOODBURN County: Marion State: OR ZipCode: 97071
Owner:
Client: Client Address:
Appraiser Name: Inspection Date:

SKETCH

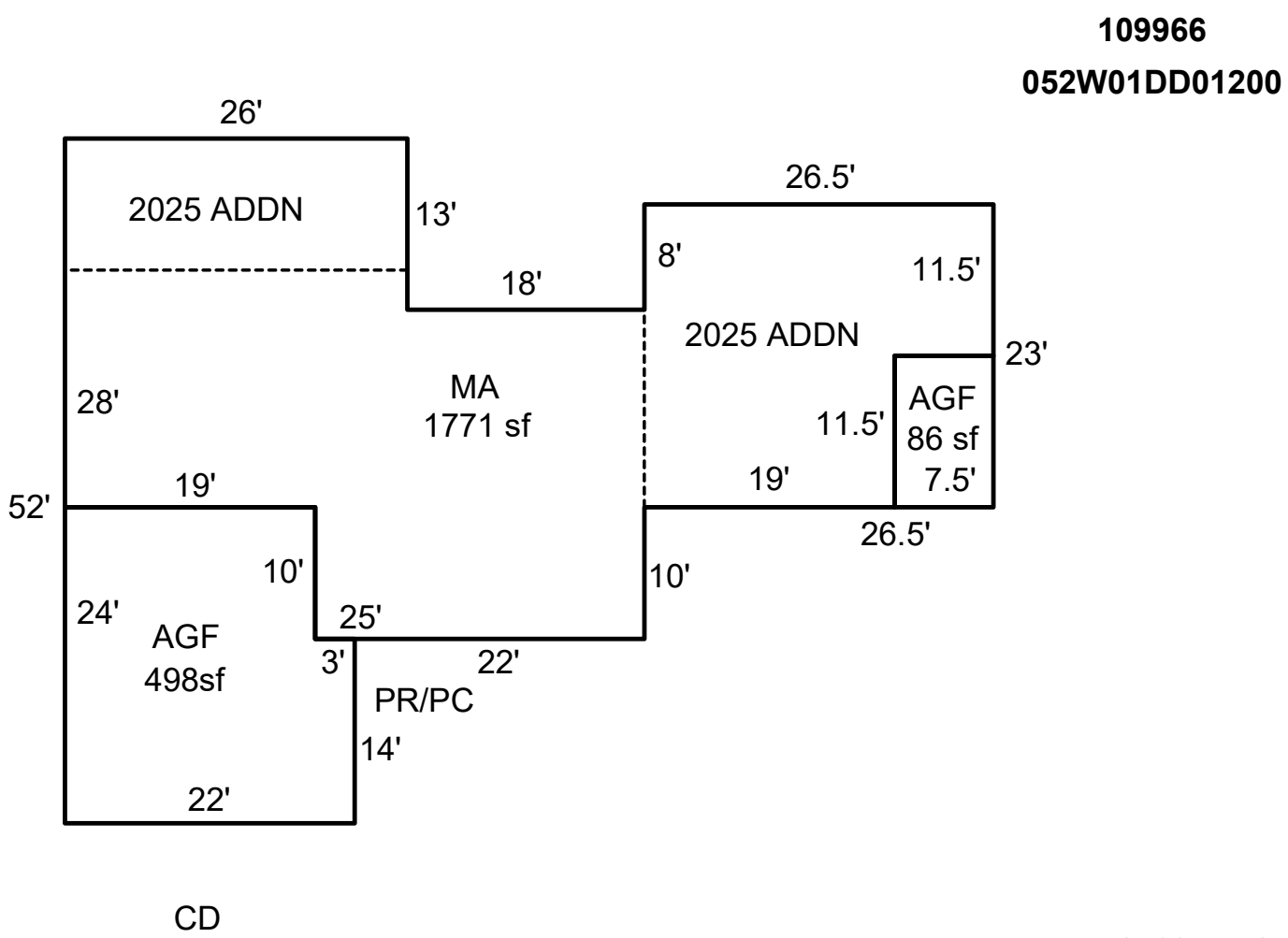

Sketch by ApexSketch

AREA CALCULATIONS SUMMARY

Code	Description	Factor	Net Size	Perimeter	Net Totals
GLA	MA	1.0	1771.3	233.0	1771.3
GAR	AGF	1.0	498.0	92.0	
	AGF	1.0	86.3	38.0	584.3
	Net LIVABLE	cnt	1	(rounded)	1,771

COMMENT TABLE 1

DRAWN BY PST 10/05/07
Updated by AE 5.15.25
Updated by AE 2.4.26

COMMENT TABLE 2

7/6/17 #101 Cycle NV
12-11-23 GM Cycle N/C
11/19/25 AG Ver

COMMENT TABLE 3

© iLOOKABOUT (US) Inc. dba Apex Software