SKETCH/AREA TABLE ADDENDUM

SUBJECT INFO

File No.: 109381 Parcel No.: 052W12AD20600
Property Address: 1680 RAINIER RD
City: WOODBURN County: Marion State: OR ZipCode: 97071
Owner:
Client: Client Address:
Appraiser Name: Inspection Date:

SKETCH

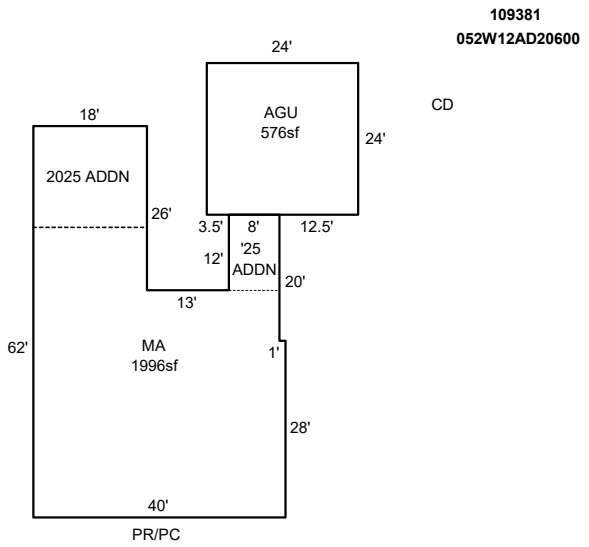

Sketch by ApexSketch

AREA CALCULATIONS SUMMARY

Code	Description	Factor	Net Size	Perimeter	Net Totals
GLA1	MA	1.0	1996.0	228.0	1996.0
GAR	AGU	1.0	576.0	96.0	576.0
	Net LIVABLE	cnt	0	(rounded)	1,996

COMMENT TABLE 1

DRAWN BY PST 11/08/07
Updated by AE 7.15.25
UPDATED BY LK 2.26.26

COMMENT TABLE 2

6-2-14 42 SV NV
N/V 28 1/27/17
2.6.26 TAG AG

COMMENT TABLE 3

© iLOOKABOUT (US) Inc. dba Apex Software