SKETCH/AREA TABLE ADDENDUM

SUBJECT INFO

File No.: 613519 Parcel No.: 083W17DD12500
Property Address: 6123 Evangelista St S
City: Salem County: Marion State: OR ZipCode: 97306
Owner:
Client: Client Address:
Appraiser Name: Inspection Date:

SKETCH

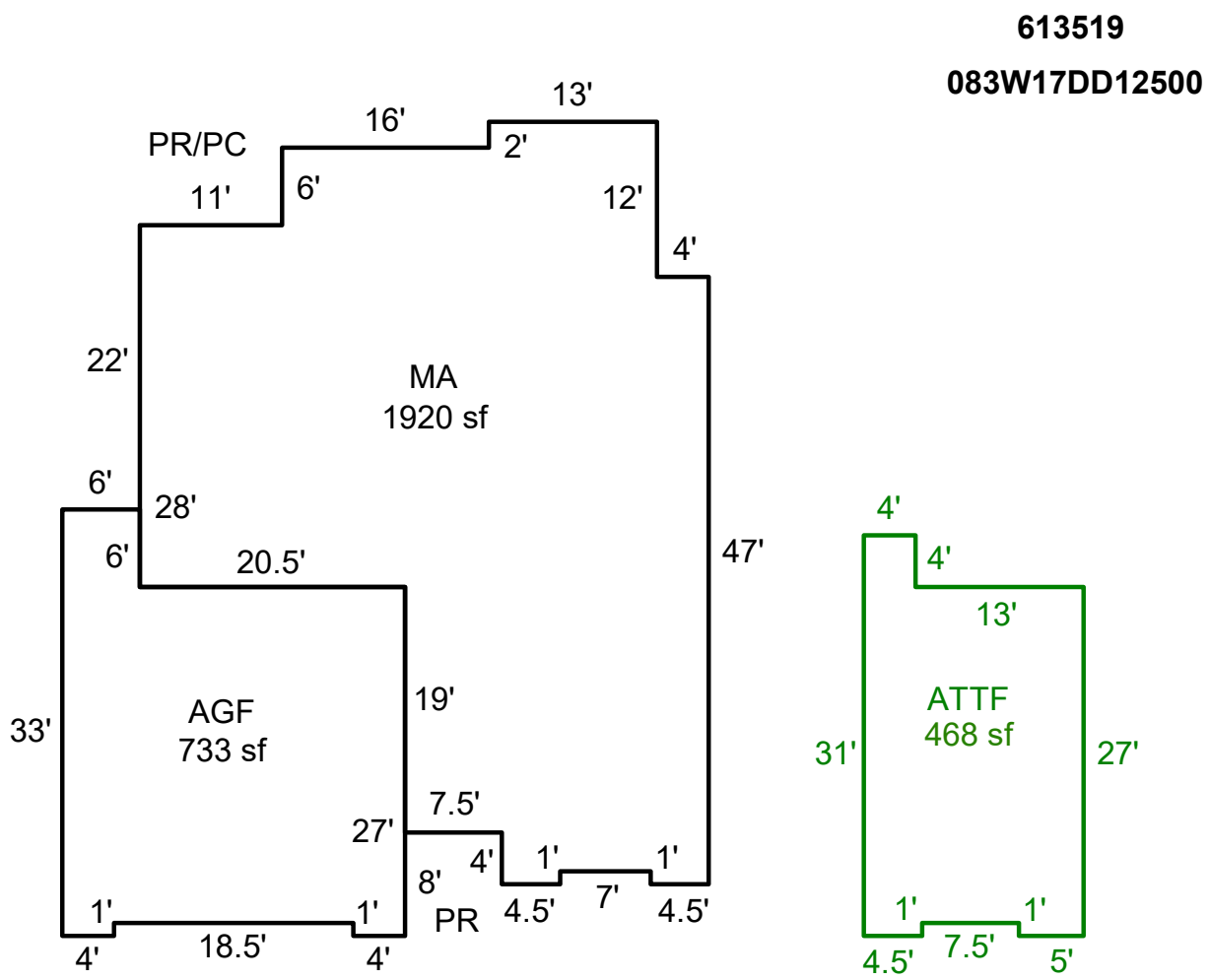

Sketch by ApexSketch

AREA CALCULATIONS SUMMARY

Code	Description	Factor	Net Size	Perimeter	Net Totals
GLA	MA	1.0	1919.5	208.0	1919.5
GLA2	ATTF	1.0	467.5	98.0	467.5
GAR	AGF	1.0	733.0	121.0	733.0
	Net LIVABLE	cnt	2	(rounded)	2,387

COMMENT TABLE 1

Drawn by AE 3.10.26

COMMENT TABLE 2

COMMENT TABLE 3

© iLOOKABOUT (US) Inc. dba Apex Software